CLINTON CITY CORPORATION
DEVELOPMENT STANDARDS

RELEASED FOR CONSTRUCTION
APRIL 2015

TABLE OF CONTENTS

SHEET	DESCRIPTION
1	COVER SHEET
2	STANDARD STREET IMPROVEMENTS
3	STANDARD STREET SECTIONS AND DRIVEWAY DETAILS
4	TYPICAL CUL-DE-SAC AND WHEELCHAIR RAMP DETAILS
5	TYPICAL FIRE HYDRANT AND WATER SERVICE CONNECTION DETAILS
6	TYPICAL FIRE HYDRANT AND WATER SERVICE CONNECTION DETAILS
7	STANDARD CATCH BASINS
8	STANDARD CATCH BASINS
9	STANDARD STORM DRAIN MANHOLE
10	FENCING DETAILS
11	LIGHT PEDESTAL DETAILS
12	STANDARD SEWER MANHOLE AND MISCELLANEOUS DETAILS
13	HORIZONTAL AND VERTICAL THRUST BLOCKS AND WATER LOOP DETAIL
14	CULINARY WATER TRENCH DETAILS
15	LAND DRAIN DETAILS
16	DEMOLITION DETAILS
17	EMERGENCY VEHICLE ACCESS DETAILS

J-U-B
Engineers Surveyors Planners

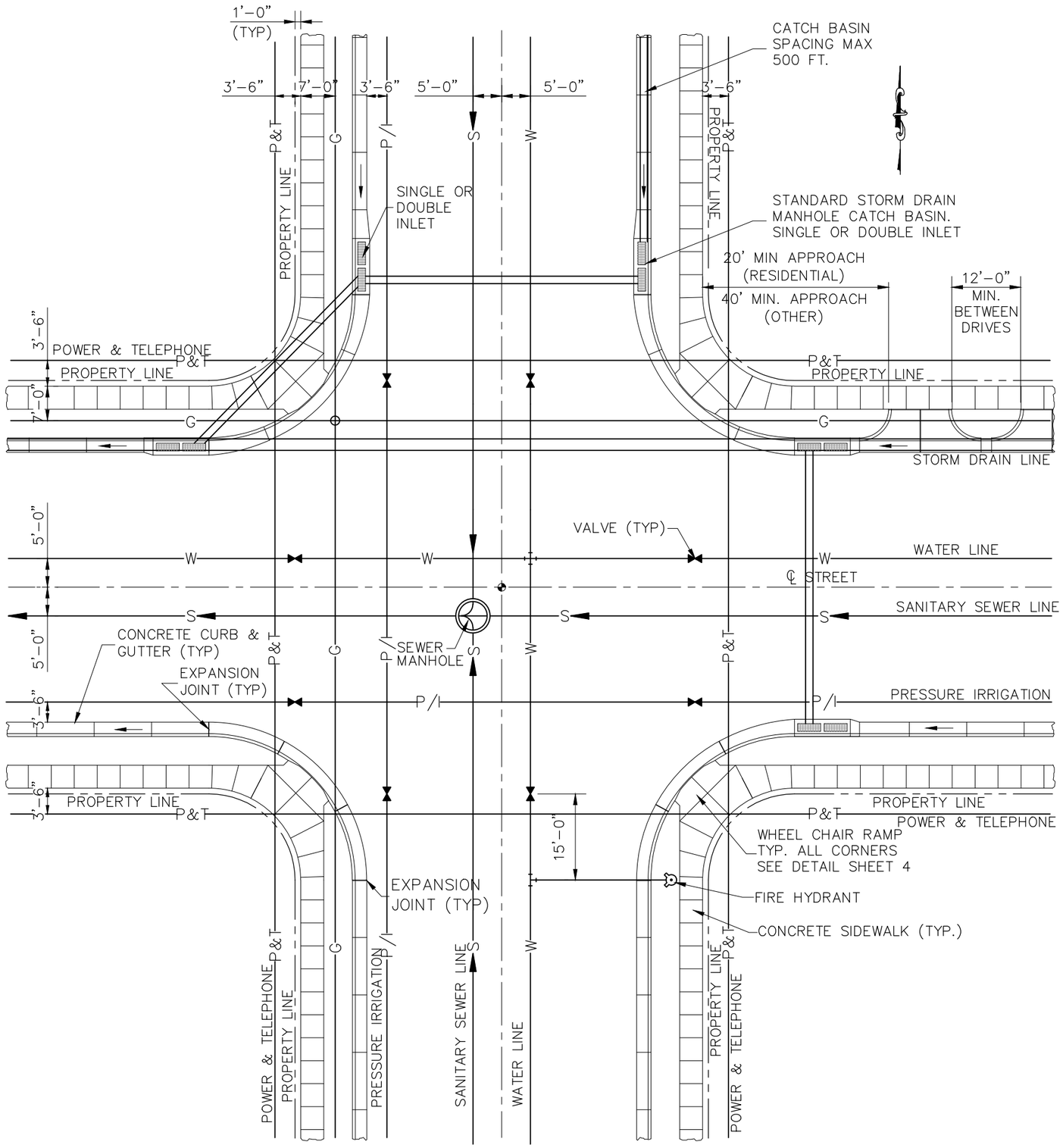

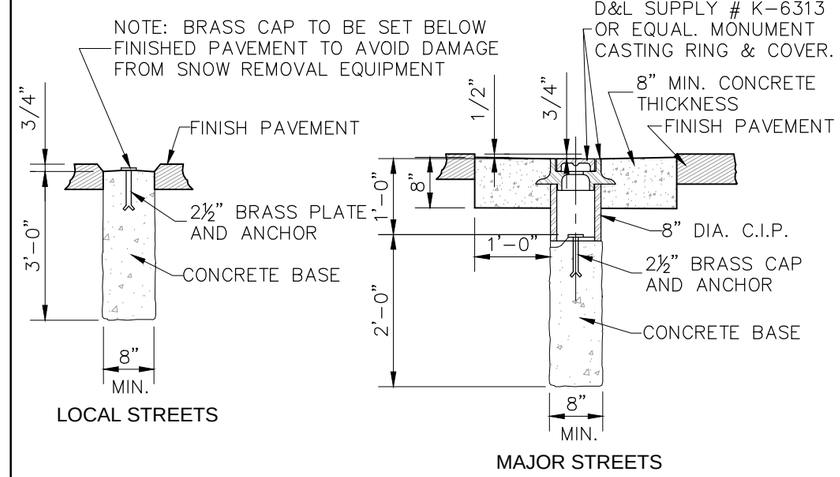

SURVEY MONUMENT SECTION

NOTES:
1. 6" THICKNESS IN RESIDENTIAL AND COMMERCIAL DRIVEWAYS
2. CRACK CONTROL JOINTS @ 4' EXPANSION JOINTS @ 32'
3. SIDEWALK MAY BE WIDER WHERE SPECIFIED BY CITY ENGINEERING DEPT.

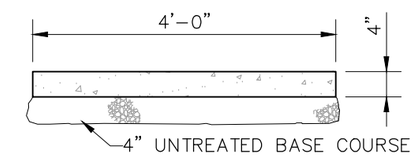

SIDEWALK SECTION

NOTES:
CRACK CONTROL JOINTS @ 10'
EXPANSION JOINTS @ 50'

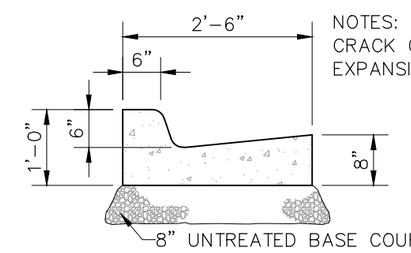

STANDARD CURB & GUTTER SECTION

NOTES:
CONSTRUCTION & EXPANSION JOINTS @ 5'
EXPANSION JOINTS @ EDGE OF APRON

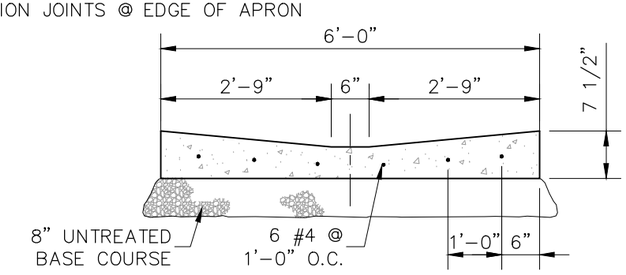

CROSS DRAIN SECTION

J-U-B Engineers • Surveyors • Planners
J-U-B ENGINEERS, Inc.
466 North 900 West
Kaysville, Utah 84037
Phone: 801.547.0393
Fax: 801.547.0397
www.jub.com

REUSE OF DRAWINGS
THIS DOCUMENT, AND THE IDEAS AND DESIGNS INCORPORATED HEREIN, AS AN INSTRUMENT OF PROFESSIONAL SERVICE, IS THE PROPERTY OF J-U-B ENGINEERS, Inc. AND IS NOT TO BE USED, IN WHOLE OR PART, FOR ANY OTHER PROJECT WITHOUT THE EXPRESS WRITTEN AUTHORIZATION OF J-U-B ENGINEERS, Inc.

NO.	DESCRIPTION	BY	APR.	DATE
	REVISION			

DEVELOPMENT STANDARDS
CLINTON CITY CORPORATION

STANDARD STREET IMPROVEMENTS

FILE:02 STREET_IMPROV
DRAWN BY: ELC
DESIGN BY: BKW
CHECKED BY: BKW
SCALE OF SHEET
HOR SCALE: AS SHOWN
VER SCALE: NONE
LAST UPDATED: 5/11/2015
DATE PLOTTED: 5/14/2015

\\KAYS\PUBLIC\STANDARDS\CITY STANDARDS\UPDATED STANDARDS\CLINTON-JUB\02 STREET_IMPROV.DWG

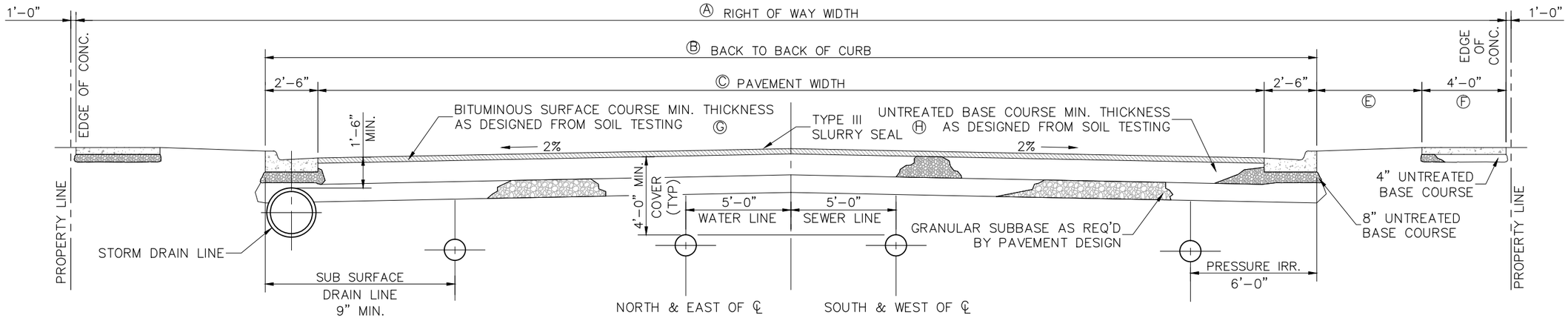

NOTES:
1. TOP BACK OF CURB ON BOTH SIDES OF ROAD TO BE SAME ELEVATIONS.
2. THE CITY ENGINEER SHALL VERIFY PAVEMENT DESIGN PRESCRIBED BY SOILS REPORT. (SEE SPECIFICATIONS)
3. COMMERCIAL AND INDUSTRIAL STREET SECTIONS ARE DETERMINED BASED ON A TRAFFIC ANALYSIS FOR THE PARTICULAR USE.

STANDARD STREET SECTION

STREET DESIGNATION	Ⓐ	Ⓑ	Ⓒ	Ⓓ	Ⓔ	Ⓕ	Ⓖ	Ⓗ
ARTERIAL	UDOT	UDOT	UDOT	UDOT	4.5'	4.0'	NOTE 2	NOTE 2
SECONDARY ARTERIAL	84'	65'	60'	2.5'	4.5'	4.0'	NOTE 2	NOTE 2
COLLECTOR	66'	47'	42'	2.5'	4.5'	4.0'	NOTE 2	NOTE 2
COLLECTOR	70'	48'	43'	2.5'	6.0'	4.0'	NOTE 2	NOTE 2
LOCAL – SITE APPROVAL	60'	41'	36'	2.5'	4.5'	4.0'	3"	10"
LOCAL – SITE APPROVAL	60'	38'	33'	2.5'	6.0'	4.0'	3"	10"

NOTE:
SCRIBE SIDEWALK ½" DEPTH AT EACH 4'-0" EXPANSION JOINT AT EACH 32'-0"
CURB & GUTTER EXPANSION JOINT AT EACH 50'
CURB & GUTTER CONSTRUCTION JOINT AT EACH 10'

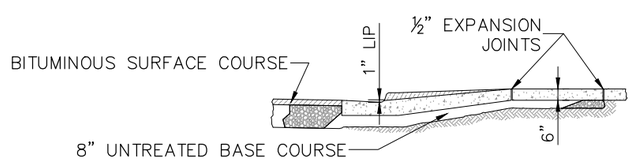

SECTION 1 / -

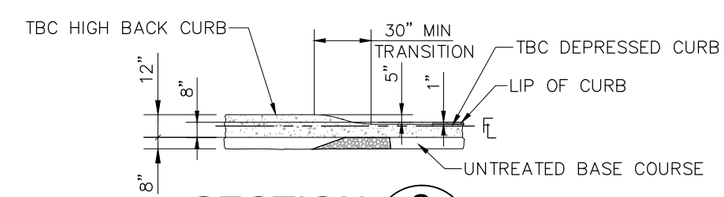

SECTION 2 / -

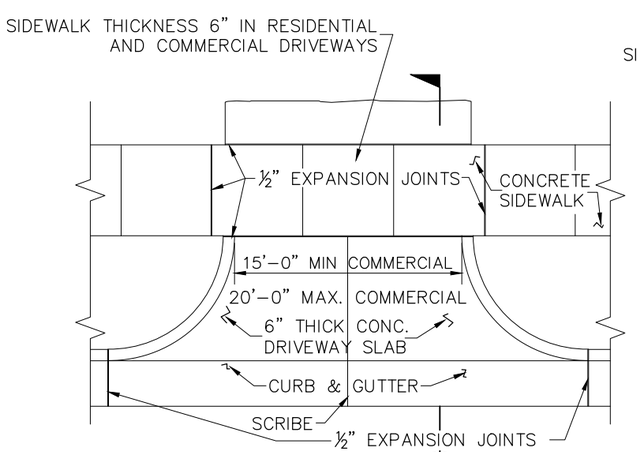

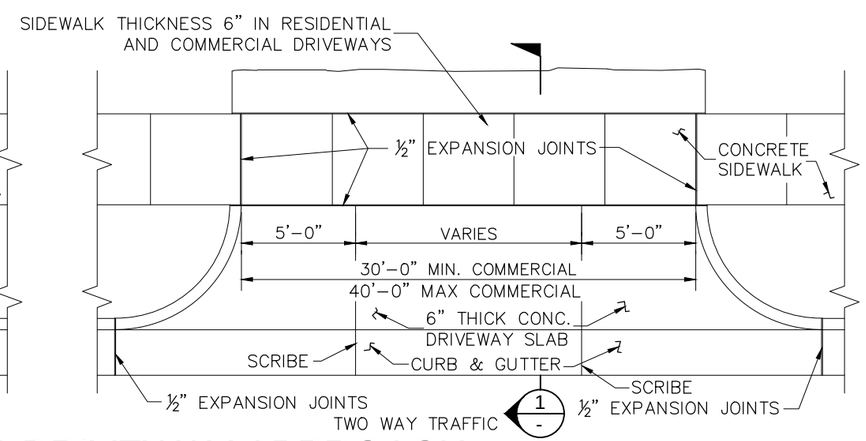

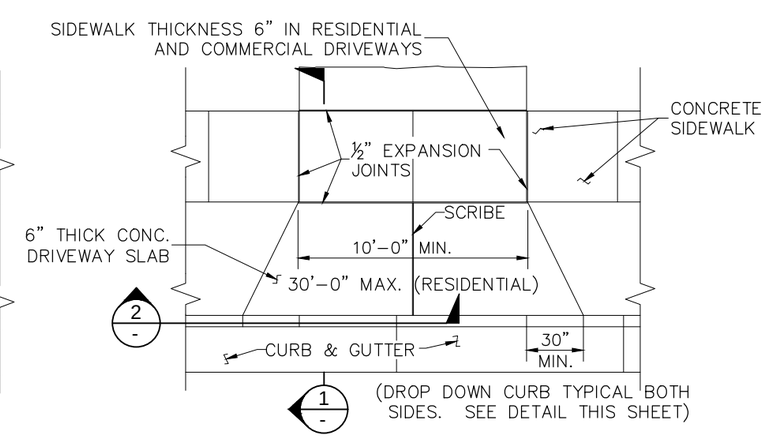

TYPE 1 DRIVEWAY APPROACH

PREFERRED STYLE FOR COMMERCIAL DEVELOPMENT

TYPE 2 DRIVEWAY APPROACH

PREFERRED STYLE FOR RESIDENTIAL DEVELOPMENT

J-U-B Engineers • Surveyors • Planners
J-U-B ENGINEERS, Inc.
466 North 900 West
Kaysville, Utah 84037
Phone: 801.547.0393
Fax: 801.547.0397
www.jub.com

REUSE OF DRAWINGS
THIS DOCUMENT, AND THE IDEAS AND DESIGNS INCORPORATED HEREIN, AS AN INSTRUMENT OF PROFESSIONAL SERVICE, IS THE PROPERTY OF J-U-B ENGINEERS, Inc. AND IS NOT TO BE USED, IN WHOLE OR PART, FOR ANY OTHER PROJECT WITHOUT THE EXPRESS WRITTEN AUTHORIZATION OF J-U-B ENGINEERS, Inc.

NO.	REVISION DESCRIPTION	BY	APPR.	DATE

DEVELOPMENT STANDARDS
CLINTON CITY CORPORATION

STANDARD STREET SECTIONS AND DRIVEWAY DETAILS

FILE:03 STREET_SEC,DRIVEWAY_DET
DRAWN BY: ELC
DESIGN BY: BKW
CHECKED BY: BKW
SCALE OF SHEET
HOR SCALE: AS SHOWN
VER SCALE: NONE
LAST UPDATED: 5/11/2015
DATE PLOTTED: 5/14/2015

\\KAYS\PUBLIC\STANDARDS\CITY STANDARDS\UPDATED STANDARDS\CLINTON-JUB\03 STREET_SEC,DRIVEWAY_DET.DWG

NOTES:
1. 400'–0" MAX. DISTANCE FROM CENTERLINE OF ADJOINING STREET TO RADIUS OF CUL–DE–SAC.
2. CUL–DE–SAC SHOULD BE USED ONLY WHERE UNUSUAL CONDITIONS EXIST.
3. MAX. GRADE IN CUL–DE–SAC AREA IS TO BE 2.5%.

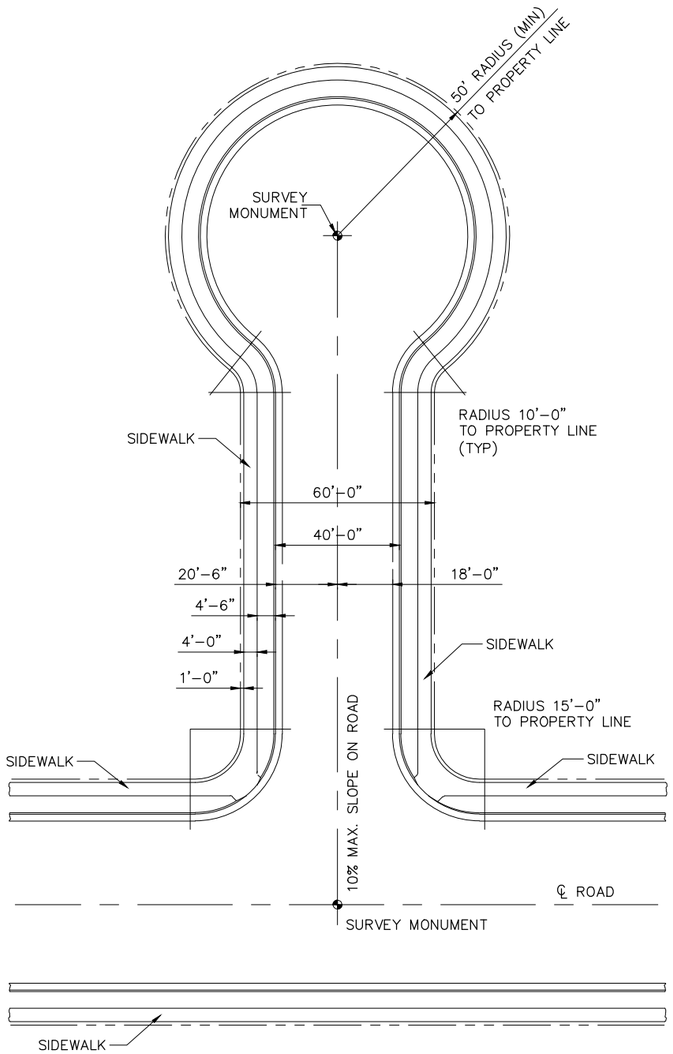

CUL-DE-SAC

SCALE N.T.S.

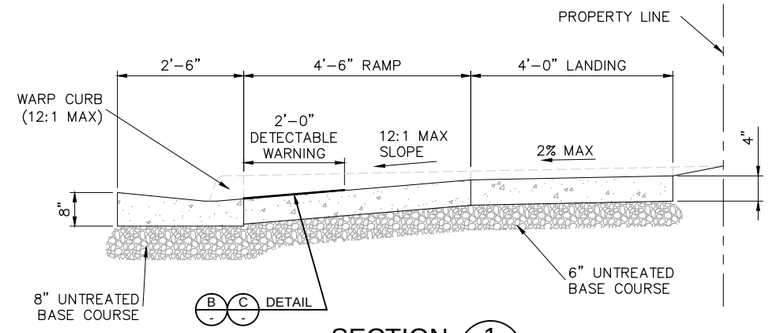

SECTION 1 -

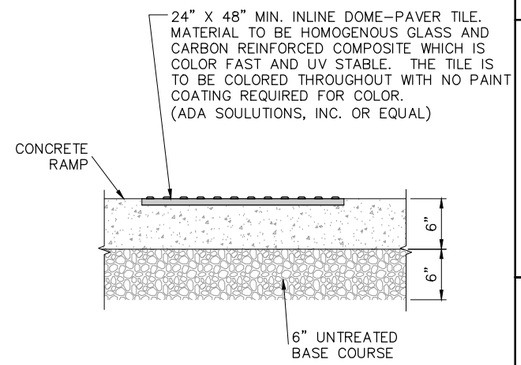

INLINE DOME-PAVER TILE

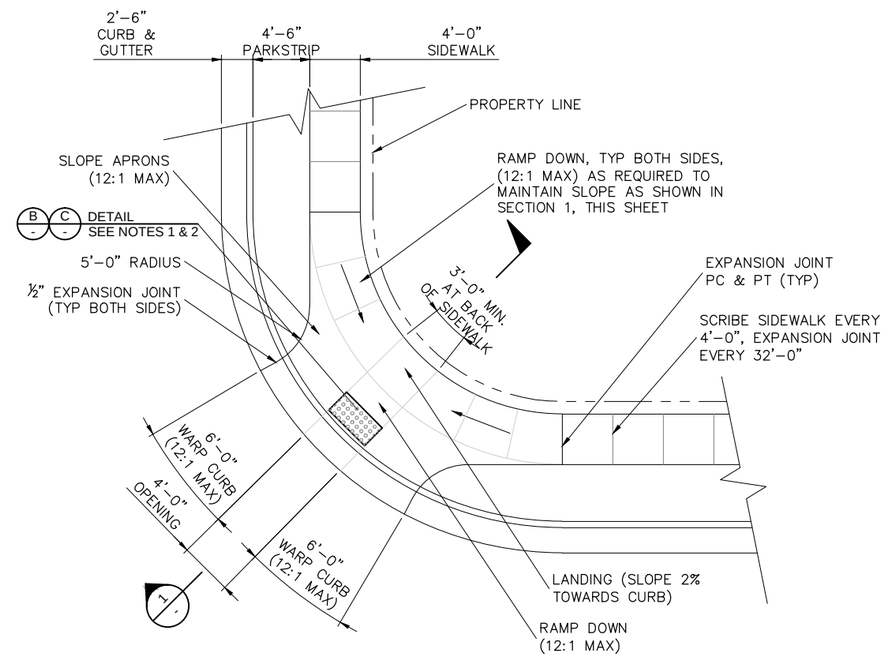

PLAN VIEW

DETAIL A -

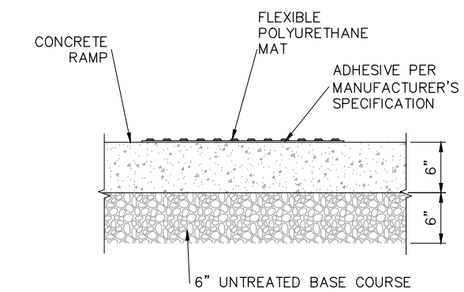

FLEXIBLE POLYURETHANE MAT
(FOR RETROFIT OF EXISTING RAMPS ONLY)

DETECTABLE WARNING SYSTEM DETAIL C -

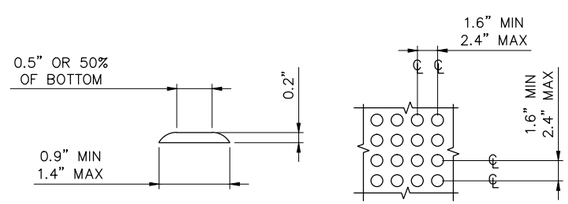

RAISED TRUNCATED DOMES

DETAIL B -

NOTES:
1. LOCATE RAISED TRUNCATED DOMES SO THAT THE EDGE NEAREST THE CURB LINE IS WITHIN 6 TO 8 INCHES FROM THE CURB LINE. PROVIDE 2–FOOT OF TRUNCATED DOME PATTERN AT THE LOWER END OF ALL CURB RAMPS EXTENDING THE FULL WIDTH OF THE CURB RAMP.
2. CHANGES IN ELEVATION GREATER THAN ¼" SHALL BE BEVELED WITH A SLOPE NO GREATER THAN 2:1
3. THE DETECTABLE WARNING SURFACE DOMES SHALL BE ORIENTED SUCH THAT THE ROWS ARE PARALLEL WITH THE DIRECTION OF PEDESTRIAN TRAVEL TO THE RAMP ON THE OPPOSITE SIDE OF THE STREET.
4. THE STANDARD COLOR FOR THE DETECTABLE WARNING SHALL BE RED BRICK. WHEN THE EXISTING SIDEWALK COLOR IS NOT STANDARD CONCRETE, THE COLOR OF THE DETECTABLE WARNING SURFACE SHALL BE DETERMINED BY CLINTON CITY.
5. WHEN A DETECTABLE WARNING SURFACE DOME IS CUT, THE REMAINING PORTION OF THE DOME SHALL BE BEVELED TO A MAXIMUM SLOPE OF 1:2.
6. INSTALLATION SHALL BE DONE IN ACCORDANCE WITH MANUFACTURER'S RECOMMENDATION.

CURB RAMP DETAIL

SCALE N.T.S.

J-U-B Engineers • Surveyors • Planners
J-U-B ENGINEERS, Inc.
466 North 900 West
Kaysville, Utah 84037
Phone: 801.547.0393
Fax: 801.547.0397
www.jub.com

REUSE OF DRAWINGS
THIS DOCUMENT, AND THE IDEAS AND DESIGNS INCORPORATED HEREIN, AS AN INSTRUMENT OF PROFESSIONAL SERVICE, IS THE PROPERTY OF J-U-B ENGINEERS, Inc. AND IS NOT TO BE USED, IN WHOLE OR PART, FOR ANY OTHER PROJECT WITHOUT THE EXPRESS WRITTEN AUTHORIZATION OF J-U-B ENGINEERS, Inc.

NO.	REVISION DESCRIPTION	BY	APPD	DATE
1	REV'D PER NEW ADA REQUIREMENTS	DM	BKW	MAR. '04

DEVELOPMENT STANDARDS
CLINTON CITY CORPORATION

TYPICAL CUL-DE-SAC AND WHEELCHAIR RAMP DETAILS

FILE:04 CUL-DE-SAC, CURB RAMP
DRAWN BY: ELC
DESIGN BY: BKW
CHECKED BY: BKW
SCALE OF SHEET
HOR SCALE: AS SHOWN
VER SCALE: NONE
LAST UPDATED: 5/11/2015
DATE PLOTTED: 5/14/2015

\\KAYS\PUBLIC\STANDARDS\CITY STANDARDS\UPDATED STANDARDS\CLINTON-JUB\04 CUL-DE-SAC, CURB RAMP.DWG

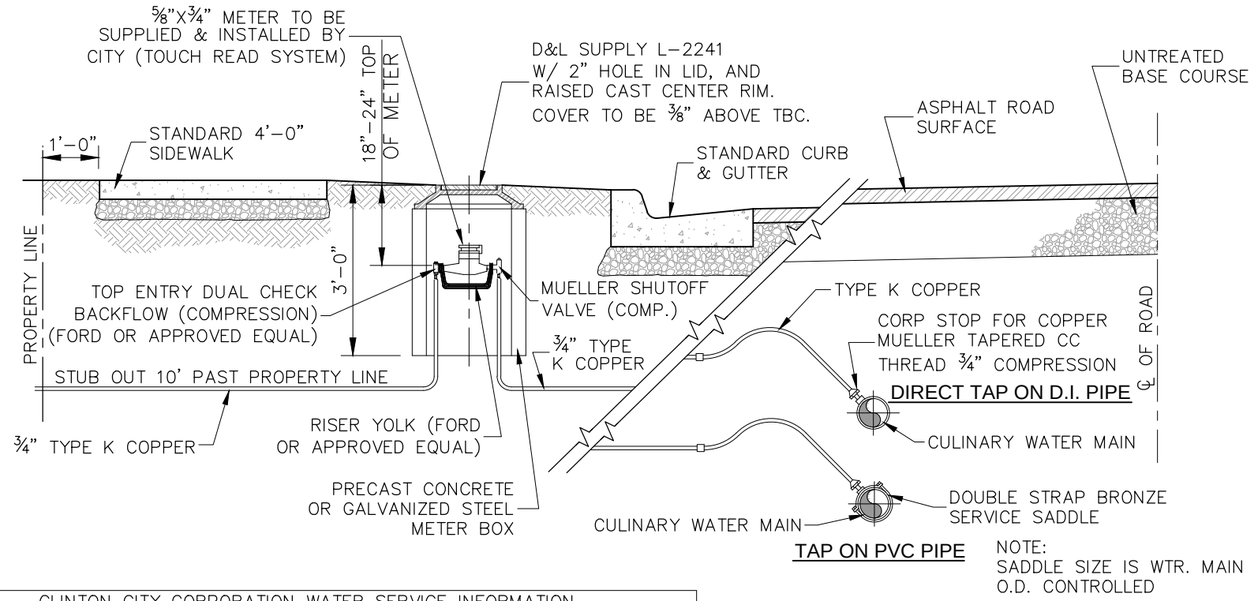

NOTE:
SADDLE SIZE IS WTR. MAIN O.D. CONTROLLED

CLINTON CITY CORPORATION WATER SERVICE INFORMATION					
SERVICE SIZE	METER BOX SIZE	TYPE OF MATERIAL FOR METER BOX	WATER METER	CONNECTION TYPE	BYPASS
3/4"	18' DIA.	CONCRETE,CORREGATED,POLYETHYLENE	BY CITY	COMPRESSION	NO
1"	24" DIA.	CONCRETE,CORREGATED,POLYETHYLENE	BY CITY	COMPRESSION	NO
1 1/2"	48" DIA.	CONCRETE	BY CITY	FLANGE	YES
2"	48" DIA.	CONCRETE	BY CITY	FLANGE	YES
3"	60" DIA.	CONCRETE	BY CITY	FLANGE	YES
4"	4'X6'BOX	CONCRETE	BY CITY	FLANGE	YES

TYPICAL WATER CONNECTION

SCALE: N.T.S.

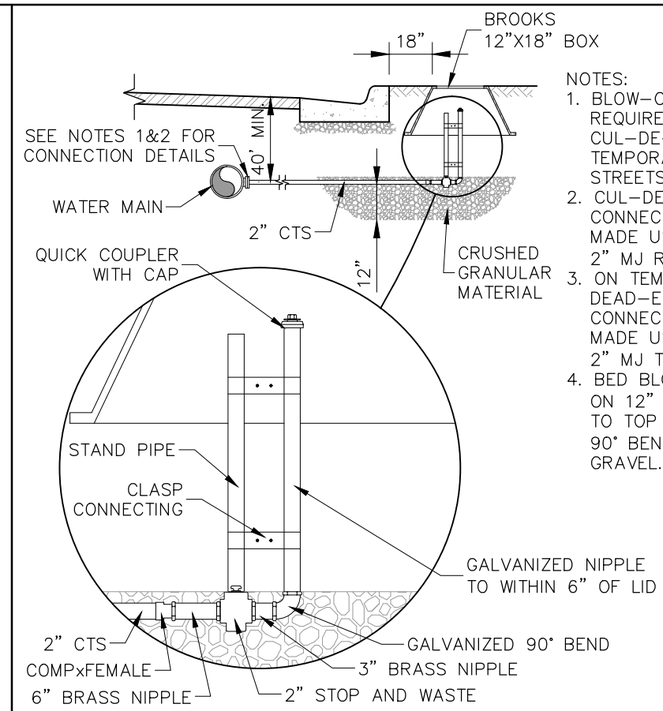

NOTES:
1. BLOW-OFF VALVE REQUIRED IN CUL-DE-SACS AND TEMPORARY DEAD-END STREETS.
2. CUL-DE-SAC CONNECTIONS TO BE MADE USING MAIN SIZE X 2" MJ REDUCER.
3. ON TEMPORARILY DEAD-ENDED STREETS CONNECTIONS SHALL BE MADE USING MAIN SIZE X 2" MJ TEE.
4. BED BLOW-OFF VALVE ON 12" OF GRAVEL. FILL TO TOP OF GALVANIZED 90° BEND WITH 1" MINUS GRAVEL.

TYPICAL BLOW-OFF VALVE DETAIL

SCALE: N.T.S.

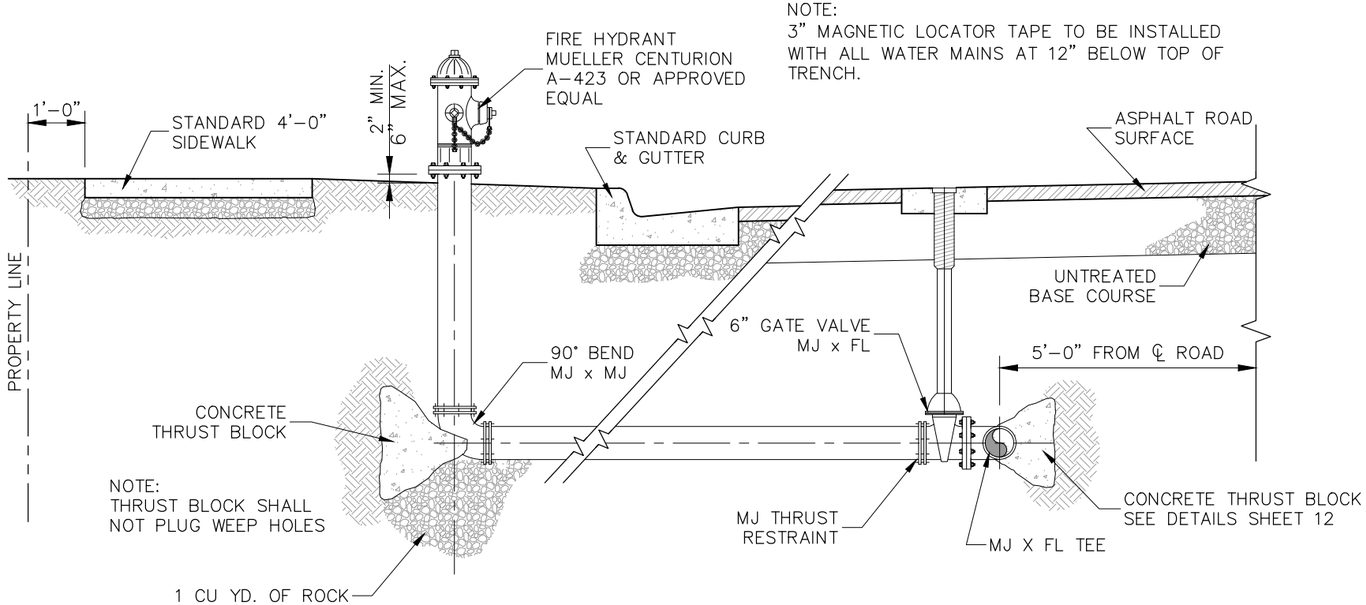

TYPICAL FIRE HYDRANT CONNECTION

SCALE: N.T.S.

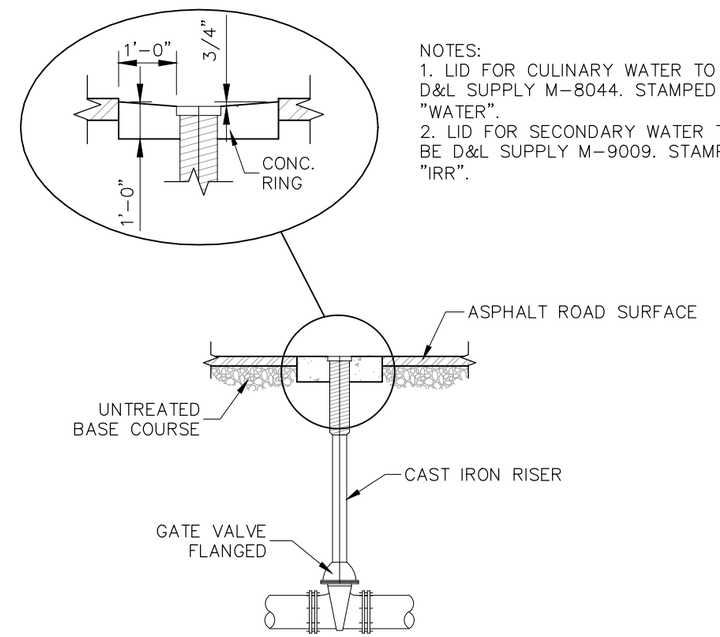

NOTES:
1. LID FOR CULINARY WATER TO BE D&L SUPPLY M-8044. STAMPED "WATER".
2. LID FOR SECONDARY WATER TO BE D&L SUPPLY M-9009. STAMPED "IRR".

TYPICAL WATER VALVE IN STREET

SCALE: N.T.S.

J-U-B Engineers • Surveyors • Planners
J-U-B ENGINEERS, Inc.
466 North 900 West
Kaysville, Utah 84037
Phone: 801.547.0393
Fax: 801.547.0397
www.jub.com

REUSE OF DRAWINGS
THIS DOCUMENT, AND THE IDEAS AND DESIGNS INCORPORATED HEREIN, AS AN INSTRUMENT OF PROFESSIONAL SERVICE, IS THE PROPERTY OF J-U-B ENGINEERS, Inc. AND IS NOT TO BE USED, IN WHOLE OR PART, FOR ANY OTHER PROJECT WITHOUT THE EXPRESS WRITTEN AUTHORIZATION OF J-U-B ENGINEERS, Inc.

No.	REVISION DESCRIPTION	BY (APPR)	DATE
2	BLOW-OFF - 2" PVC TO 2" POLY	BKW(BKW)	AUG. '04
1	FH - MOVED VALVE TO STREET	DMB(BKW)	OCT. '02

DEVELOPMENT STANDARDS
CLINTON CITY CORPORATION

TYPICAL FIRE HYDRANT AND WATER SERVICE CONNECTION DETAILS

FILE:05-06 FIRE_HYD.WATER_CONN
DRAWN BY: ELC
DESIGN BY: BKW
CHECKED BY: BKW
SCALE OF SHEET
HOR SCALE: AS SHOWN
VER SCALE: NONE
LAST UPDATED: 5/11/2015
DATE PLOTTED: 5/14/2015

\\KAYS\PUBLIC\STANDARDS\CITY STANDARDS\UPDATED STANDARDS\CLINTON-JUB\05-06 FIRE_HYD.WATER_CONN.DWG

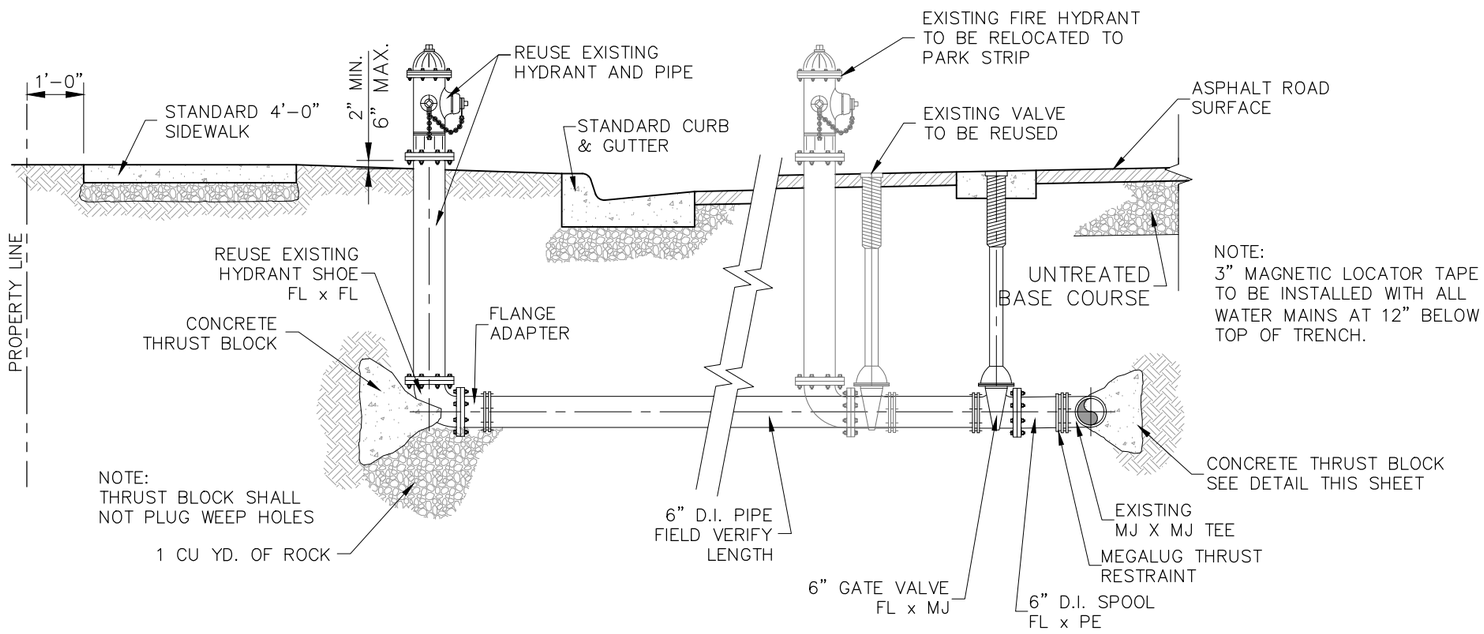

EXISTING FIRE HYDRANT RELOCATION DETAIL

SCALE: N.T.S.

J-U-B Engineers • Surveyors • Planners

J-U-B ENGINEERS, Inc.
466 North 900 West
Kaysville, Utah 84037

Phone: 801.547.0393
Fax: 801.547.0397
www.jub.com

REUSE OF DRAWINGS
THIS DOCUMENT, AND THE IDEAS AND DESIGNS INCORPORATED HEREIN, AS AN INSTRUMENT OF PROFESSIONAL SERVICE, IS THE PROPERTY OF **J-U-B ENGINEERS, Inc.** AND IS NOT TO BE USED, IN WHOLE OR PART, FOR ANY OTHER PROJECT WITHOUT THE EXPRESS WRITTEN AUTHORIZATION OF **J-U-B ENGINEERS, Inc.**

NO.	DESCRIPTION	BY	APR.	DATE

REVISION

DEVELOPMENT STANDARDS
CLINTON CITY CORPORATION

TYPICAL FIRE HYDRANT AND WATER SERVICE CONNECTION DETAILS

FILE:05-06 FIRE_HYD,WATER_CONN
DRAWN BY: ELC
DESIGN BY: BKW
CHECKED BY: BKW
SCALE OF SHEET
HOR SCALE: AS SHOWN
VER SCALE: NONE
LAST UPDATED: 5/11/2015
DATE PLOTTED: 5/14/2015

\\KAYS\PUBLIC\STANDARDS\CITY STANDARDS\UPDATED STANDARDS\CLINTON-JUB\05-06 FIRE_HYD,WATER_CONN.DWG

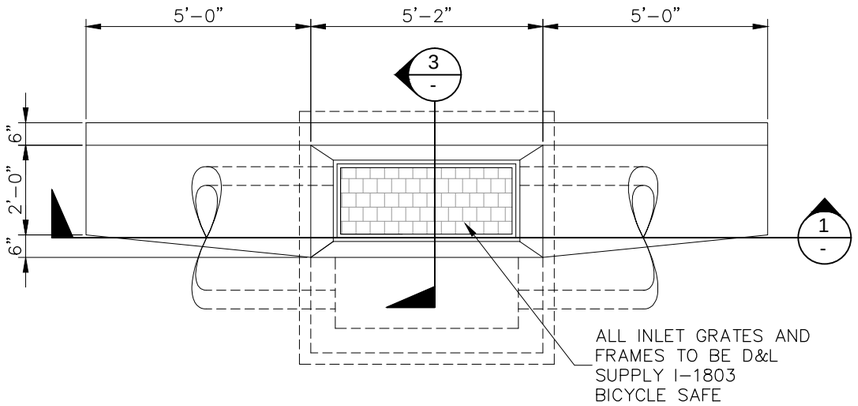

SINGLE CATCH BASIN PLAN VIEW

SCALE: N.T.S.

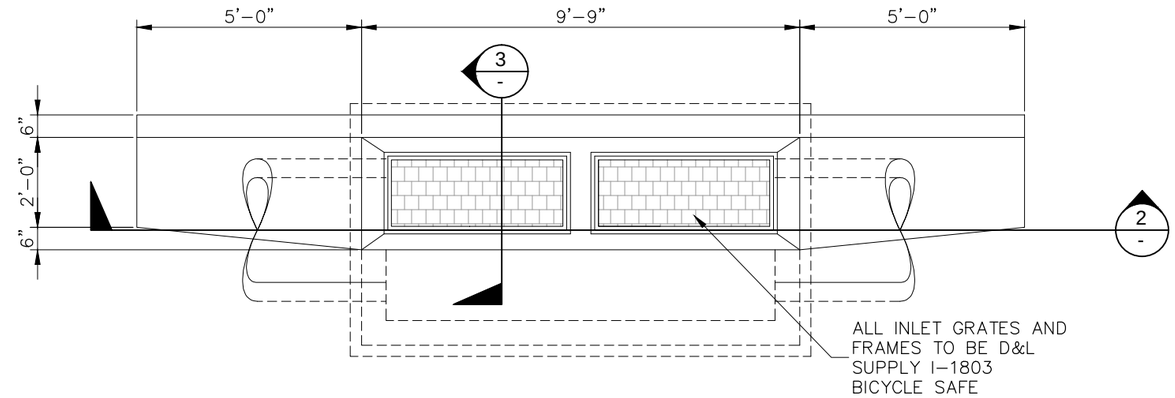

DOUBLE CATCH BASIN PLAN VIEW

SCALE: N.T.S.

NOTES:
1. REFER TO SHEET 8 FOR GENERAL NOTES.
2. REFER TO SHEET 8 FOR DIMENSION TABLE AND NOTES.
3. CATCH BASINS TO BE INSTALLED AT A MAXIMUM SPACING OF 500 FEET.
4. OPEN FACE CATCH BASIN LOCATIONS WILL BE DETERMINED DURING PLAN APPROVAL.

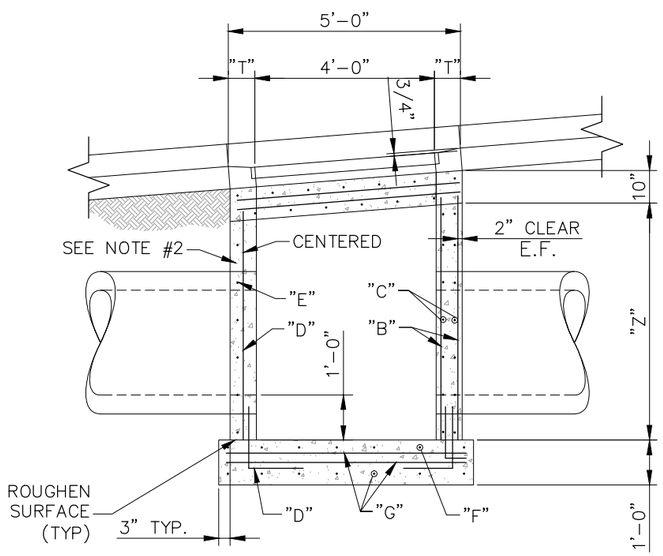

SECTION 1 / -

SCALE: N.T.S.

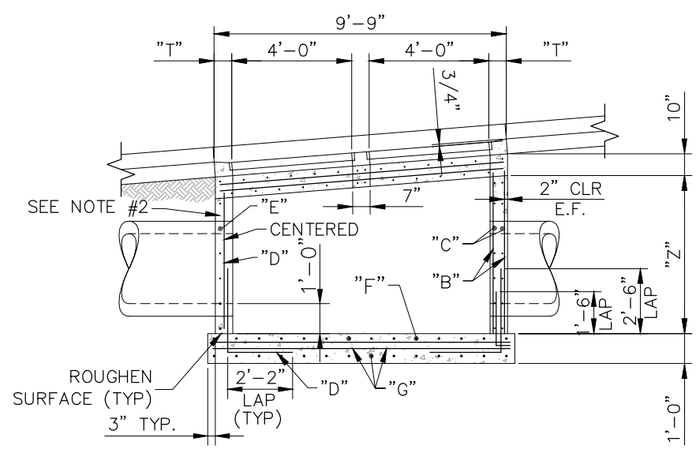

SECTION 2 / -

SCALE: N.T.S.

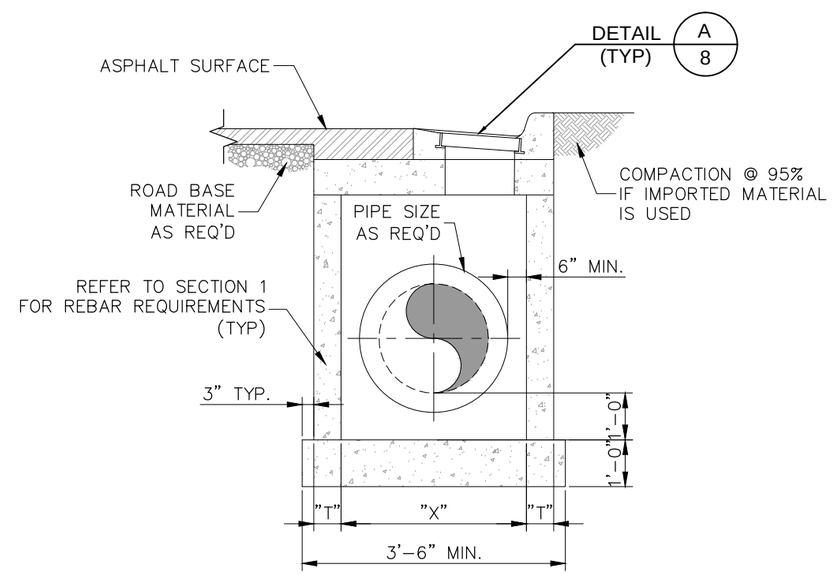

SECTION 3 / -

SCALE: N.T.S.

J-U-B
Engineers • Surveyors • Planners

J-U-B ENGINEERS, Inc.
466 North 900 West
Kaysville, Utah 84037

Phone: 801.547.0393
Fax: 801.547.0397
www.jub.com

REUSE OF DRAWINGS
THIS DOCUMENT, AND THE IDEAS AND DESIGNS INCORPORATED HEREIN, AS AN INSTRUMENT OF PROFESSIONAL SERVICE, IS THE PROPERTY OF J-U-B ENGINEERS, Inc. AND IS NOT TO BE USED, IN WHOLE OR PART, FOR ANY OTHER PROJECT WITHOUT THE EXPRESS WRITTEN AUTHORIZATION OF J-U-B ENGINEERS, Inc.

NO.	DESCRIPTION	BY	APPR.	DATE

REVISION

DEVELOPMENT STANDARDS
CLINTON CITY CORPORATION

STANDARD CATCH BASINS

FILE:07 CATCH_BASIN_1
DRAWN BY: ELC
DESIGN BY: BKW
CHECKED BY: BKW
SCALE OF SHEET
HOR SCALE: AS SHOWN
VER SCALE: NONE
LAST UPDATED: 5/14/2015
DATE PLOTTED: 5/14/2015

\\KAYSPUBLIC\STANDARDS\CITY STANDARDS\UPDATED STANDARDS\CLINTON-JUB\07 CATCH_BASIN_1.DWG

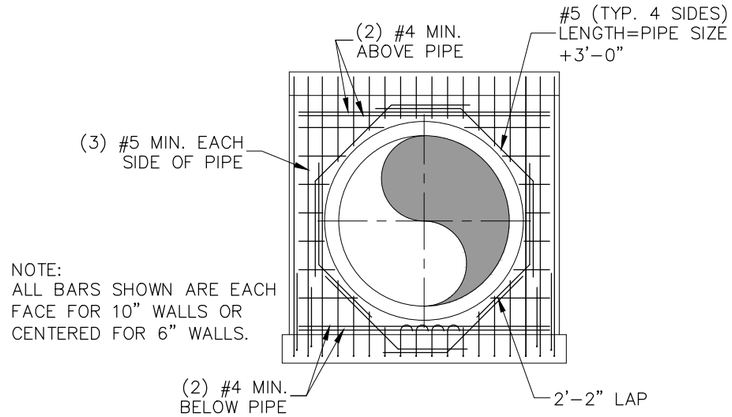

REINFORCEMENT AT WALL PENETRATION

DETAIL B
SCALE: N.T.S.

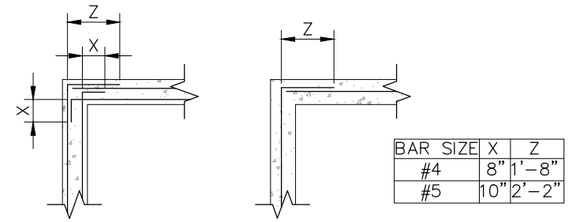

BAR SIZE	X	Z
#4	8"	1'-8"
#5	10"	2'-2"

HORIZONTAL REINFORCEMENT AT WALL INTERSECTIONS
SCALE: N.T.S.

GENERAL NOTES:
1. ALL STRUCTURAL CONCRETE SHALL DEVELOP A MINIMUM COMPRESSIVE STRENGTH OF 4000 PSI IN 28 DAYS.
2. REINFORCEMENT STEEL SHALL BE DEFORMED BARS CONFORMING IN QUALITY TO THE REQUIREMENTS OF ASTM DESIGNATION A-615, GRADE 60, INCLUDING SUPPLEMENTARY REQUIREMENTS (S1).
3. ALL DETAILING, FABRICATION AND PLACING OF REINFORCING BARS SHALL BE IN ACCORDANCE WITH THE "MANUAL OF STANDARD PRACTICE FOR DETAILING REINFORCED CONCRETE STRUCTURES" ACI-315, LATEST EDITION.
4. TOLERANCES II PLACING REINFORCEMENT SHALL BE:
   ±⅜" FOR MEMBERS WITH D < 8"
   ±½" FOR MEMBERS WITH D > 8"
5. DOWELS, PIPES, WATER STOPS AND OTHER INSTALLED MATERIALS AND ACCESSORIES SHALL BE HELD SECURELY IN POSITION WHILE CONCRETE IS BEING PLACED.
6. UNLESS OTHERWISE SHOWN, ASIDE FROM NORMAL ACCESSORIES USED TO HOLD REINFORCING BARS FIRMLY IN POSITION, THE FOLLOWING SHALL BE ADDED:
A) IN SLABS #5 RISER BARS @ 36" O.C. MAX TO SUPPORT TOP REINFORCING BARS.
B) IN WALLS WITH 2 CURTAINS #3 U OR Z SHAPE SPACES @ 6'-0" O.C. EACH WAY.
7. METAL CLIPS OR SUPPORTS SHALL NOT BE PLACED IN CONTACT WITH THE FORMS OR THE SUBGRADE. CONCRETE BLOCKS (OR DOBBIES) SUPPORTING BARS ON SUBGRADE SHALL BE IN SUFFICIENT NUMBERS TO SUPPORT THE BARS WITHOUT SETTLEMENT, BUT IN NO CASE SHALL SUCH SUPPORT BE CONTINUOUS.
8. DOWELS SHALL BE WIRED OR OTHERWISE HELD IN POSITION. THEY SHALL NOT BE SHOVED INTO FRESHLY PLACED CONCRETE.
9. REINFORCED BARS AND ACCESSORIES SHALL NOT BE IN CONTACT WITH ANY PIPE, PIPE FLANGE, OR METAL PARTS EMBEDDED IN CONCRETE. A MINIMUM OF 2" CLEARANCE SHALL BE PROVIDED AT ALL TIMES.
10. STRUCTURES SHALL BE BACKFILLED WITH GRANULAR SOIL, COMPACTED TO 96% ACCORDING TO ASTM-81557.
11. ALL CONSTRUCTION JOINTS SHALL BE ROUGHED AND CLEANED AND FREE OF LAITANCE.
12. STRUCTURES HAVE BEEN DESIGNED FOR THE FOLLOWING: IF CONDITIONS ARE EXCEEDED THE ENGINEER SHALL BE NOTIFIED.
A) AASHTO HS-20 TRUCK LOAD.
B) 1'-6" MAX. SOIL ABOVE THE ROOF OF THE STRUCTURE.
C) GROUND WATER TO TOP OF STRUCTURE.
D) "AT REST" LATERAL SOIL PRESSURE OF 60 PCF FOR DRY SOIL CONDITIONS AND 92.4 PCF WHEN GROUND WATER IS PRESENT.

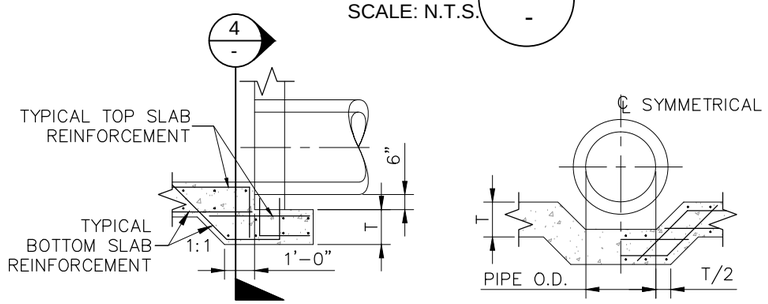

OPTIONAL FOOTING DETAIL AT WALL PIPE CONNECTION

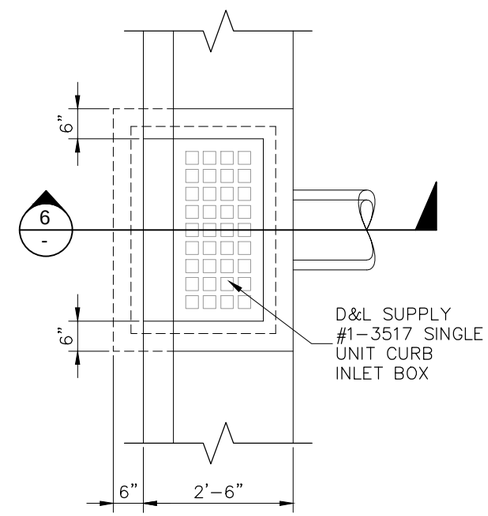

OPEN FACE CATCH BASIN PLAN
SCALE: N.T.S.

SECTION THRU PIPE

SECTION 4
SCALE: N.T.S.

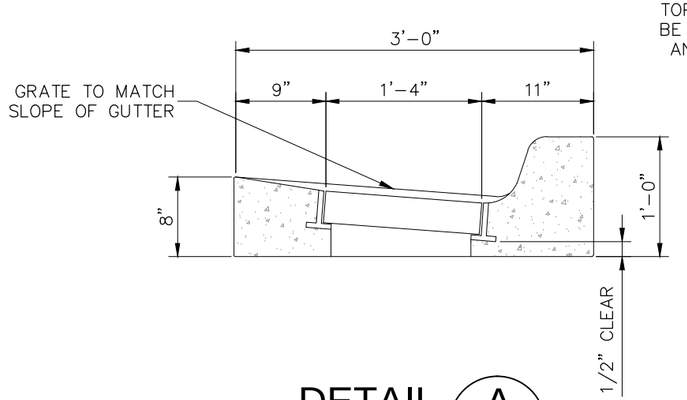

DETAIL A
SCALE: N.T.S.

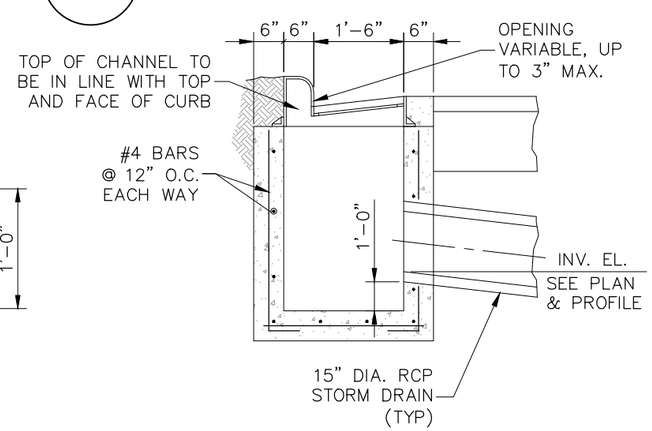

SECTION 6
SCALE: N.T.S.

DIMENSION TABLE

PIPE SIZE (IN.)	USE LARGEST PIPE SIZE FOR THESE DIMENSIONS AND REBAR EXCEPT DIMENSION "Y"									
	"X"	"Z"	"T"	"A"	"B"	"C"	"D"	"E"	"F"	"G"
15	3'-0"	3'-3"	6"	#4 @ 12"	------	------	#5 @ 9"	#4 @ 12"	#4 @ 12"	#5 @ 9"
18	3'-0"	3'-3"	6"	#4 @ 12"	------	------	#5 @ 9"	#4 @ 12"	#4 @ 12"	#5 @ 9"
21	3'-3"	3'-6"	6"	#4 @ 12"	------	------	#5 @ 9"	#4 @ 12"	#4 @ 12"	#5 @ 9"
24	3'-6"	3'-9"	6"	#4 @ 12"	------	------	#5 @ 9"	#4 @ 12"	#4 @ 12"	#5 @ 9"
27	3'-9"	4'-0"	6"	#4 @ 12"	------	------	#5 @ 9"	#4 @ 12"	#4 @ 12"	#5 @ 9"
30	4'-2"	4'-5"	6"	#4 @ 12"	------	------	#5 @ 9"	#4 @ 12"	#4 @ 12"	#5 @ 9"
33	4'-5"	4'-8"	6"	#4 @ 12"	------	------	#5 @ 9"	#4 @ 12"	#4 @ 12"	#5 @ 9"
36	4'-8"	4'-11"	6"	#4 @ 12"	------	------	#5 @ 9"	#4 @ 12"	#4 @ 12"	#5 @ 9"
42	5'-3"	5'-6"	6"	#4 @ 12"	------	------	#5 @ 9"	#4 @ 12"	#4 @ 12"	#5 @ 9"
48	5'-10"	6'-1"	10"	#4 @ 12"	#5 @ 12"	#4 @ 12"	------	------	#4 @ 12"	#5 @ 12"
54	6'-5"	6'-8"	10"	#4 @ 12"	#5 @ 12"	#4 @ 12"	------	------	#4 @ 12"	#5 @ 12"
60	7'-0"	7'-3"	10"	#4 @ 12"	#5 @ 12"	#4 @ 12"	------	------	#4 @ 12"	#5 @ 12"
66	7'-7"	8'-10"	10"	#4 @ 12"	#5 @ 12"	#4 @ 12"	------	------	#4 @ 9"	#5 @ 12"
72	8'-2"	8'-5"	10"	#4 @ 12"	#5 @ 12"	#4 @ 12"	------	------	#4 @ 9"	#5 @ 12"

NOTES:
1. THE "H" REBAR IS BASED ON THE SMALLER PIPE. WHEN THE SMALLER PIPE IS 15"-36" USE #4 @ 6". WHEN THE SMALLER PIPE IS 42"-60" USE #5 @ 6". WHEN THE SMALLER PIPE IS 66" OR 72" USE #6 @ 6".
2. WALL THICKNESS IS BASED ON THE LARGEST OF THE PIPES. FOR 10" WALLS, USE 2 LAYERS OF STEEL. FOR 6" WALLS, USE A SINGLE LAYER OF STEEL.
3. WHEN "Z" IS LESS THAN 4'-0", THE VERTICAL REBAR LAP MAY BE ELIMINATED AND DOWELS EXTENDED TO THE TOP OF THE WALL.

J-U-B Engineers • Surveyors • Planners
J-U-B ENGINEERS, Inc.
466 North 900 West
Kaysville, Utah 84037
Phone: 801.547.0393
Fax: 801.547.0397
www.jub.com

REUSE OF DRAWINGS
THIS DOCUMENT, AND THE IDEAS AND DESIGNS INCORPORATED HEREIN, AS AN INSTRUMENT OF PROFESSIONAL SERVICE, IS THE PROPERTY OF J-U-B ENGINEERS, Inc. AND IS NOT TO BE USED, IN WHOLE OR PART, FOR ANY OTHER PROJECT WITHOUT THE EXPRESS WRITTEN AUTHORIZATION OF J-U-B ENGINEERS, Inc.

NO.	DESCRIPTION	BY	APPR.	DATE

REVISION

DEVELOPMENT STANDARDS
CLINTON CITY CORPORATION

STANDARD CATCH BASINS

FILE:08 CATCH_BASIN_2
DRAWN BY: ELC
DESIGN BY: BKW
CHECKED BY: BKW
SCALE OF SHEET
HOR SCALE: AS SHOWN
VER SCALE: NONE
LAST UPDATED: 5/11/2015
DATE PLOTTED: 5/14/2015

\\KAYS\PUBLIC\STANDARDS\CITY STANDARDS\UPDATED STANDARDS\CLINTON-JUB\08 CATCH_BASIN_2.DWG

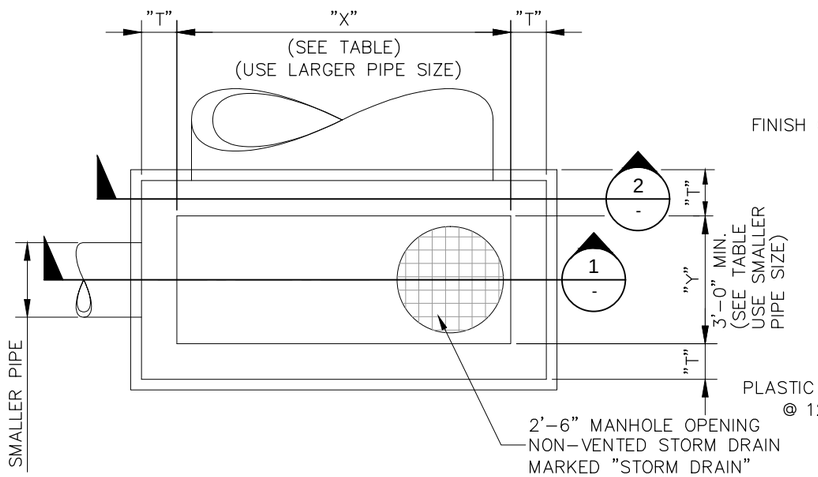

STANDARD CLEANOUT PLAN VIEW

SCALE: N.T.S. (TYPE 1)

MANHOLE WALL AND CONE SECTION SHALL CONFORM TO ASTM C 478

LIFT HOLES SHALL BE FILLED WITH GROUT

IF MANHOLES ARE TOO SHALLOW FOR CONE SECTION, USE FLAT CONCRETE LID INSTEAD

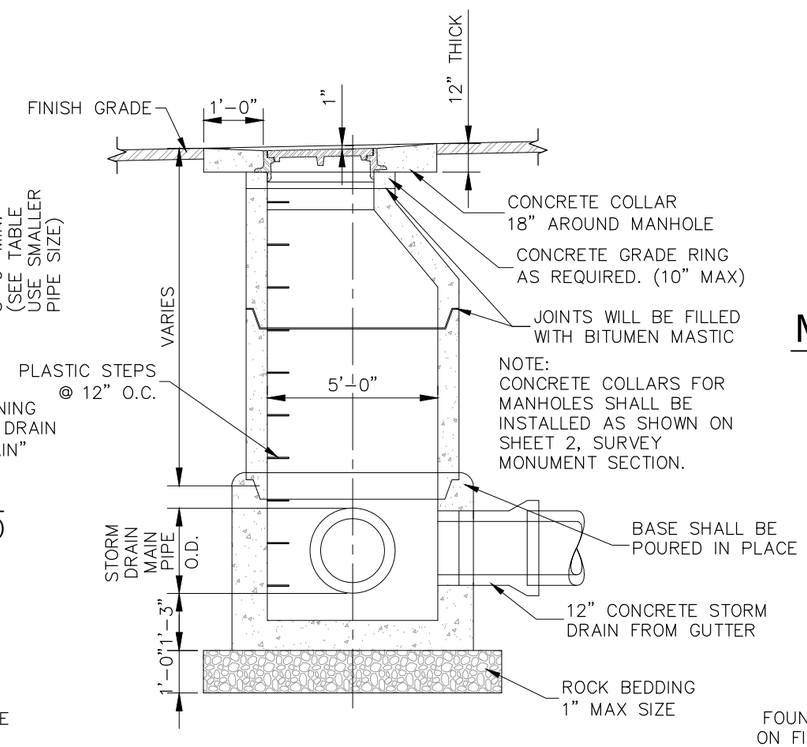

NOTE:
CONCRETE COLLARS FOR MANHOLES SHALL BE INSTALLED AS SHOWN ON SHEET 2, SURVEY MONUMENT SECTION.

TYPICAL MANHOLE SECTION

SCALE: N.T.S.

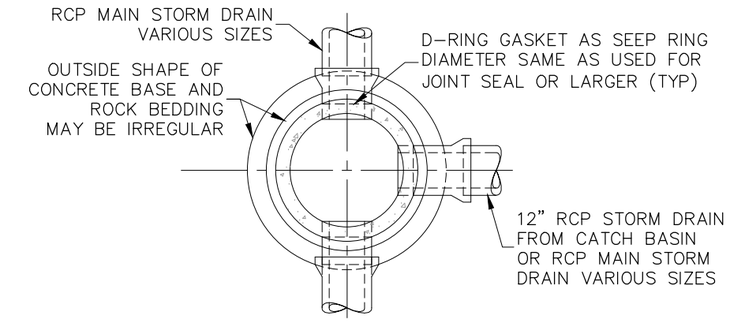

MANHOLE PLAN VIEW BELOW CONE

SCALE: N.T.S.

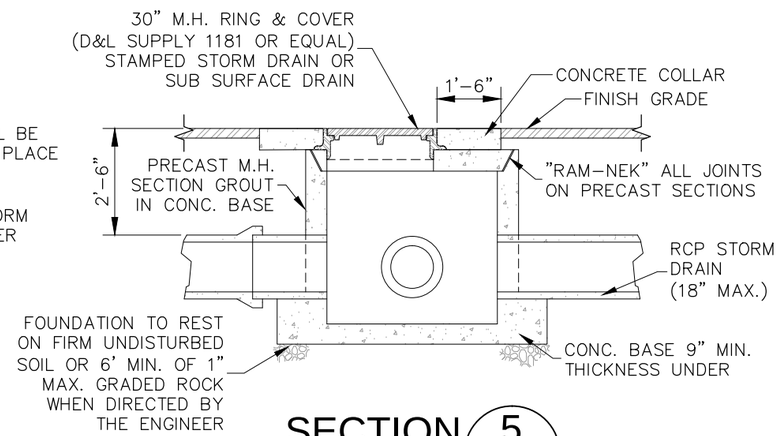

SECTION 5 / -

SCALE: N.T.S.

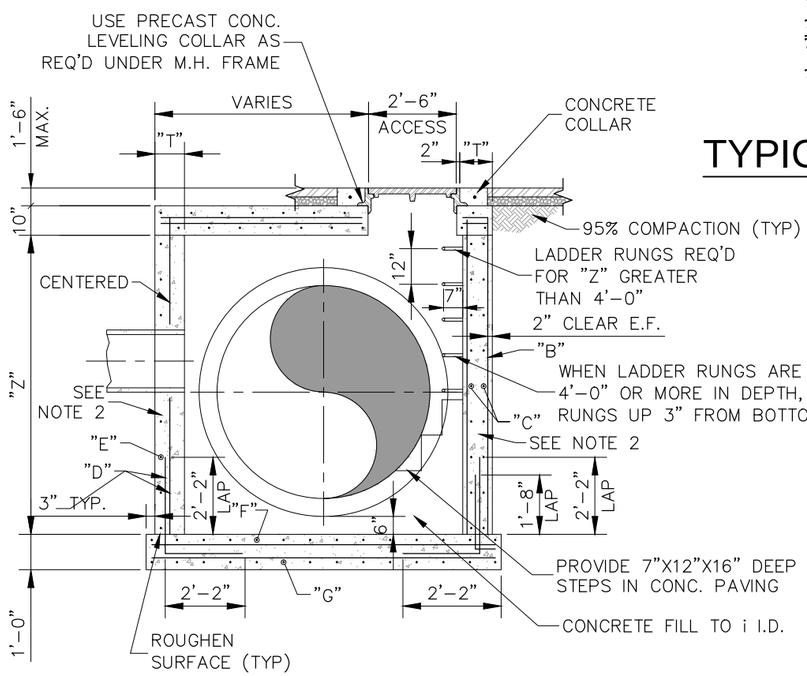

SECTION 1 / -

SCALE: N.T.S.

NOTES:
1. REFER TO SHEET 7 FOR GENERAL NOTES.
2. REFER TO SHEET 7 FOR DIMENSION TABLE AND NOTES.

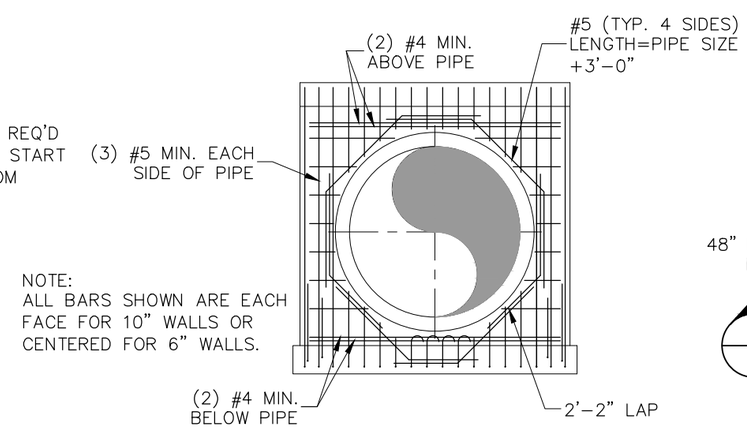

NOTE:
ALL BARS SHOWN ARE EACH FACE FOR 10" WALLS OR CENTERED FOR 6" WALLS.

SECTION 2 / -

SCALE: N.T.S.

NOTE:
CONCRETE COLLARS FOR MANHOLES SHALL BE INSTALLED AS SHOWN ON SHEET 2, SURVEY MONUMENT SECTION.

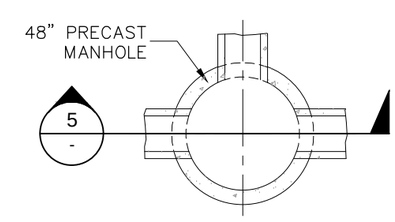

STORM DRAIN MANHOLE PLAN VIEW

SCALE: N.T.S. (FLAT LID)

J-U-B Engineers • Surveyors • Planners
J-U-B ENGINEERS, Inc.
466 North 900 West
Kaysville, Utah 84037
Phone: 801.547.0393
Fax: 801.547.0397
www.jub.com

REUSE OF DRAWINGS
THIS DOCUMENT, AND THE IDEAS AND DESIGNS INCORPORATED HEREIN, AS AN INSTRUMENT OF PROFESSIONAL SERVICE, IS THE PROPERTY OF J-U-B ENGINEERS, Inc. AND IS NOT TO BE USED, IN WHOLE OR PART, FOR ANY OTHER PROJECT WITHOUT THE EXPRESS WRITTEN AUTHORIZATION OF J-U-B ENGINEERS, Inc.

NO.	DESCRIPTION	BY	APPR.	DATE

REVISION

DEVELOPMENT STANDARDS
CLINTON CITY CORPORATION

STANDARD STORM DRAIN MANHOLE

FILE:09 SDMH
DRAWN BY: ELC
DESIGN BY: BKW
CHECKED BY: BKW
SCALE OF SHEET
HOR SCALE: AS SHOWN
VER SCALE: NONE
LAST UPDATED: 5/11/2015
DATE PLOTTED: 5/14/2015

\\KAYS\PUBLIC\STANDARDS\CITY STANDARDS\UPDATED STANDARDS\CLINTON-JUB\09 SDMH.DWG

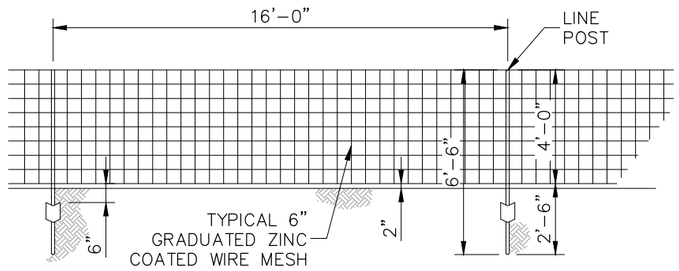

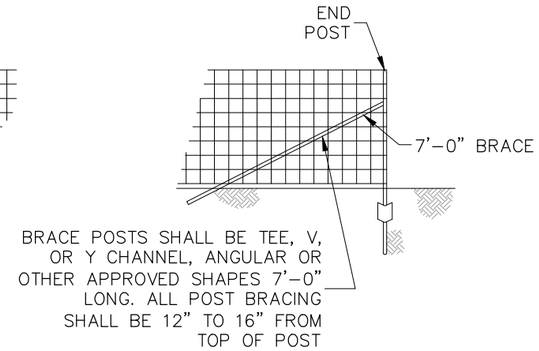

NOTE:
BLOCK WALLS, WHEN REQUIRED, SHALL BE DESIGNED FOR THE SPECIFIC APPLICATION.

TYPE "D" CONSTRUCTION FENCE

SCALE: N.T.S.

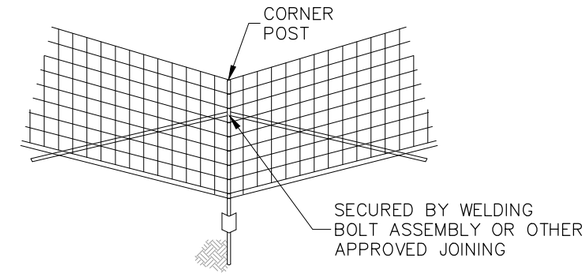

TYPICAL CORNER POST

SCALE: N.T.S.

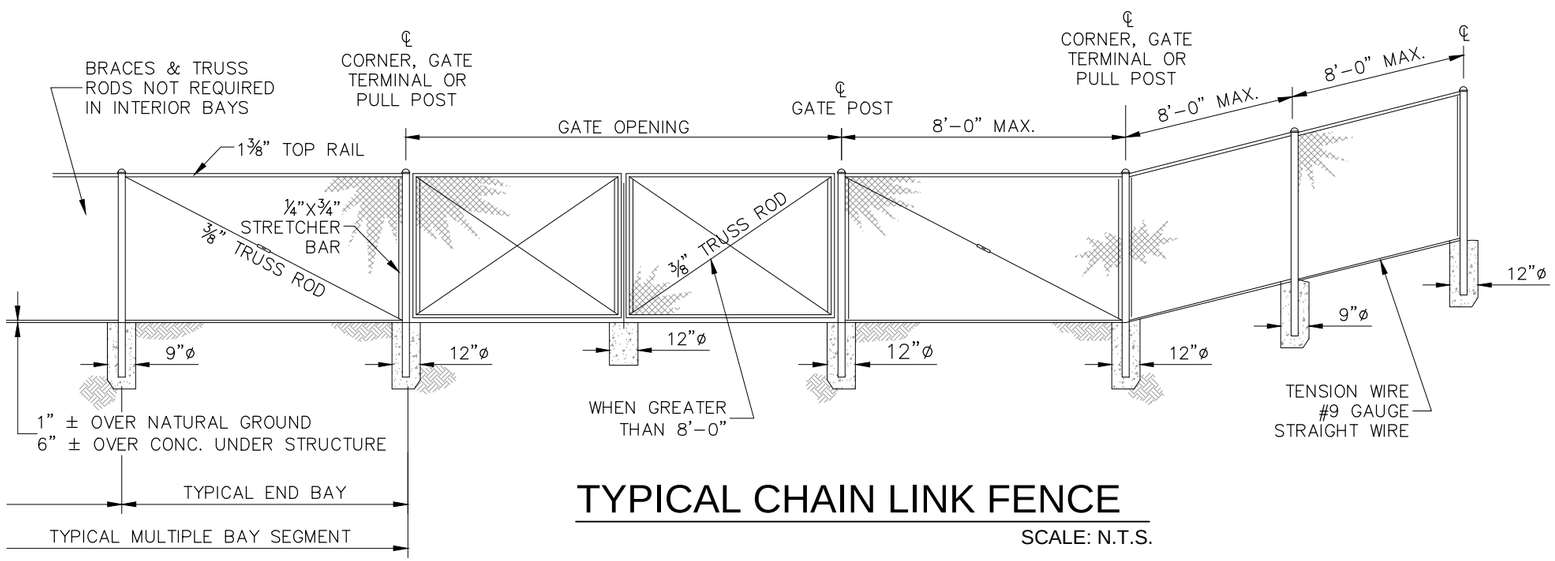

TYPICAL CHAIN LINK FENCE

SCALE: N.T.S.

NOTES:

1. ALL FABRIC SHALL BE 6'–0" HIGH CHAIN LINK OF 2" GALVANIZED MESH OF 11 GAUGE.
2. ALL STEEL PIPE MEMBERS SHALL CONFORM TO THE REQUIREMENTS OF A.S.T.M. DESIGNATION A–120, SCHEDULE 40, HOT DIPPED ZINC COATED STEEL PIPE.
3. ALL POSTS SHALL BE SET IN CONCRETE AND SHALL BE TOPPED WITH BALL TYPED OR OTHER APPROVED ORNAMENT.
4. ALL END, CORNER, OR PULL POST SHALL BE 8'–0" IN LENGTH WITH A MINIMUM DIAMETER OF 2⅜". ALL LINE POSTS SHALL BE 8'–0" IN LENGTH WITH A MINIMUM DIAMETER OF 1⅞".
5. PRIVACY SLATS SHALL BE OF FLAT, TUBULAR CONSTRUCTION MANUFACTURED FROM VIRGIN POLYETHYLENE CONTAINING AN ULTRAVIOLET INHIBITOR. THE SLATS SHALL BE RETAINED BY A RETAINING CHANNEL AT THE BOTTOM OF THE FENCE FABRIC.

GATES			
GATE POSTS AND GATE FRAMES			
HEIGHT	GATE OPENING	GATE POST SCH. 40	GATE FRAME 16 GA.
6 FEET	SINGLE TO 4'–0" OR DOUBLE TO 8'–0"	2⅜"	1⅝"
	SINGLE OVER 4'–0" TO 12'–0" OR DOUBLE OVER 8'–0" TO 24'–0"	2⅞"	1⅝"
	SINGLE OVER 12'–0" TO 18'–0" OR DOUBLE OVER 24'–0" TO 36'–0"	4"	1⅝"
	SINGLE OVER 18'–0" OR DOUBLE OVER 36'–0"	8⅝"	1⅞"

HEIGHT OF FABRIC	DEPTH OF POST	LENGTH OF END, CORNER OR PULL POSTS	LENGTH OF LINE POSTS	SIZE OF POSTS		
				END, CORNER AND PULL PIPE OPTION (MIN. 300'–0")	LINE POST (MIN. SIZE) PIPE OPTION	GATE POSTS
6'–0"	2'–0"+	8'–0"+	8'–0"	2⅜" 16 GA.	1⅞" 16 GA. 8'–0" O.C.	SEE GATE TABLE

J-U-B Engineers • Surveyors • Planners
J-U-B ENGINEERS, Inc.
466 North 900 West
Kaysville, Utah 84037
Phone: 801.547.0393
Fax: 801.547.0397
www.jub.com

REUSE OF DRAWINGS
THIS DOCUMENT, AND THE IDEAS AND DESIGNS INCORPORATED HEREIN, AS AN INSTRUMENT OF PROFESSIONAL SERVICE, IS THE PROPERTY OF J-U-B ENGINEERS, Inc. AND IS NOT TO BE USED, IN WHOLE OR PART, FOR ANY OTHER PROJECT WITHOUT THE EXPRESS WRITTEN AUTHORIZATION OF J-U-B ENGINEERS, Inc.

NO.	DESCRIPTION	BY	APR.	DATE

REVISION

DEVELOPMENT STANDARDS
CLINTON CITY CORPORATION

FENCING DETAILS

FILE:10 FENCE
DRAWN BY: ELC
DESIGN BY: BKW
CHECKED BY: BKW
SCALE OF SHEET
HOR SCALE: AS SHOWN
VER SCALE: NONE
LAST UPDATED: 5/11/2015
DATE PLOTTED: 5/14/2015

\\KAYS\PUBLIC\STANDARDS\CITY STANDARDS\UPDATED STANDARDS\CLINTON-JUB\10 FENCE.DWG

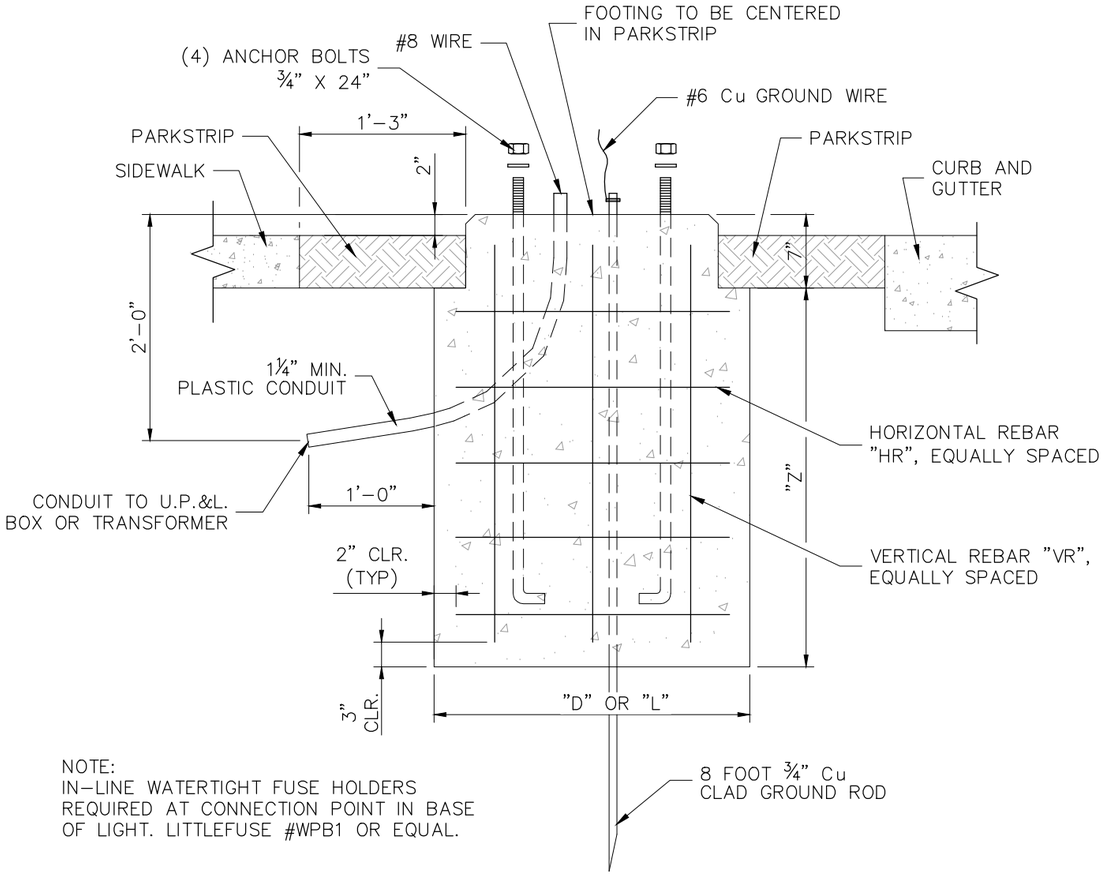

NOTE:
IN-LINE WATERTIGHT FUSE HOLDERS REQUIRED AT CONNECTION POINT IN BASE OF LIGHT. LITTLEFUSE #WPB1 OR EQUAL.

LIGHT PEDESTAL DETAIL

SCALE: N.T.S.

FOOTING DIMENSION TABLE				
	CIRCULAR			SQUARE
DIAMETER ("D") OR SIDE LENGTH ("L")	24"	30"	36"	48"
DEPTH ("Z")	43"	40"	37"	30"
VERTICAL REINFORCING ("VR")	(5) #4	(7) #4	(6) #5	(16) #5 OR (12) #6
HORIZONTAL REINFORCING ("HR")	(5) #4	(5) #4	(5) #4	(5) #4

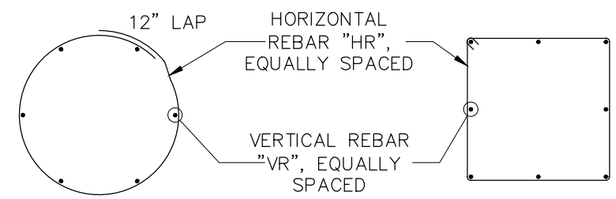

TYPICAL CIRCULAR FOOTING REINFORCING

TYPICAL SQUARE FOOTING REINFORCING

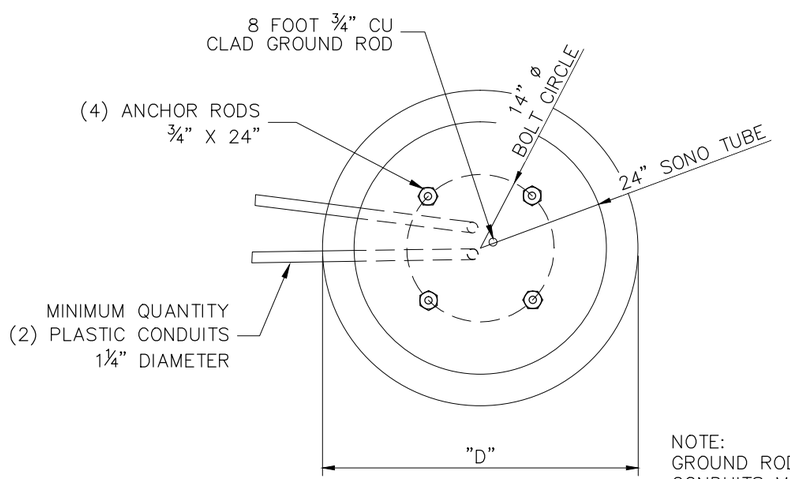

NOTE:
GROUND ROD AND PLASTIC CONDUITS MUST BE LOCATED WITHIN A 3" RADIUS FROM THE CENTER OF BOLT CIRCLE.

CIRCULAR FOOTING PLAN VIEW

SCALE: N.T.S.

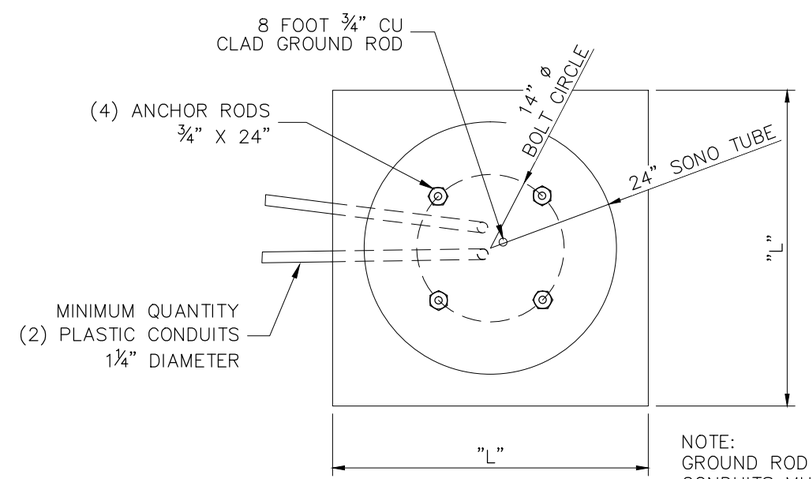

NOTE:
GROUND ROD AND PLASTIC CONDUITS MUST BE LOCATED WITHIN A 3" RADIUS FROM THE CENTER OF BOLT CIRCLE.

SQUARE FOOTING PLAN VIEW

SCALE: N.T.S.

J-U-B Engineers • Surveyors • Planners

J-U-B ENGINEERS, Inc.
466 North 900 West
Kaysville, Utah 84037

Phone: 801.547.0393
Fax: 801.547.0397
www.jub.com

REUSE OF DRAWINGS
THIS DOCUMENT, AND THE IDEAS AND DESIGNS INCORPORATED HEREIN, AS AN INSTRUMENT OF PROFESSIONAL SERVICE, IS THE PROPERTY OF J-U-B ENGINEERS, Inc. AND IS NOT TO BE USED, IN WHOLE OR PART, FOR ANY OTHER PROJECT WITHOUT THE EXPRESS WRITTEN AUTHORIZATION OF J-U-B ENGINEERS, Inc.

NO.	DESCRIPTION	BY	APR.	DATE

REVISION

DEVELOPMENT STANDARDS
CLINTON CITY CORPORATION

LIGHT PEDESTAL DETAILS

FILE:11 LIGHT_PED
DRAWN BY: ELC
DESIGN BY: BKW
CHECKED BY: BKW
SCALE OF SHEET
HOR SCALE: AS SHOWN
VER SCALE: NONE
LAST UPDATED: 5/14/2015
DATE PLOTTED: 5/14/2015

\\KAYS\PUBLIC\STANDARDS\CITY STANDARDS\UPDATED STANDARDS\CLINTON-JUB\11 LIGHT_PED.DWG

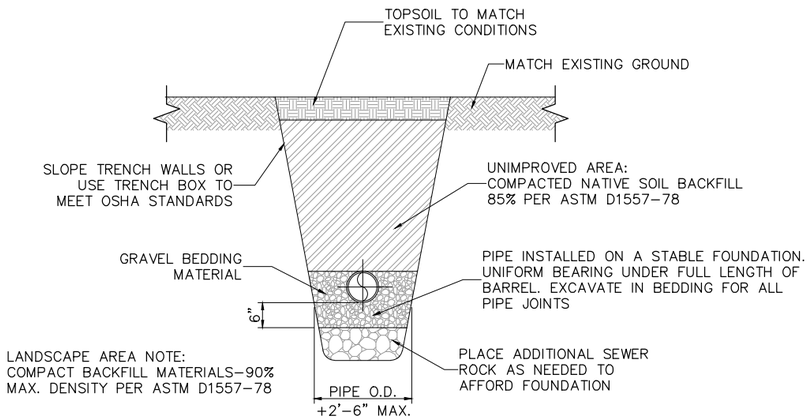

TYPICAL SEWER TRENCH SECTION

(UNIMPROVED & LANDSCAPED AREAS) SCALE: N.T.S.

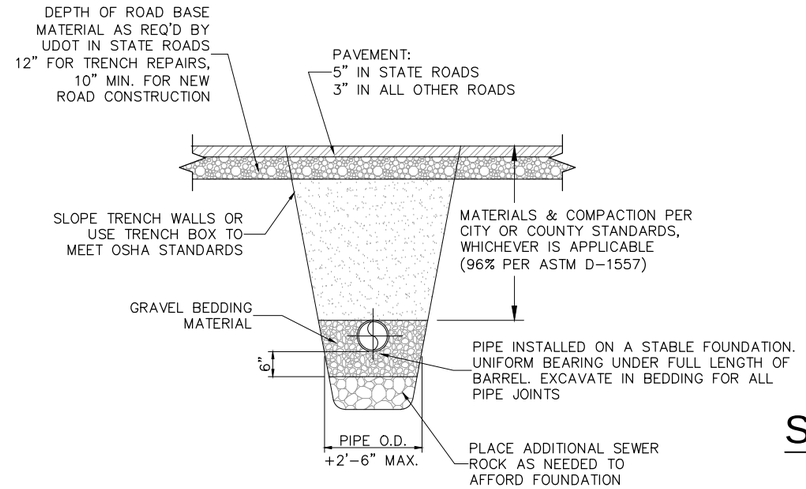

TYPICAL SEWER TRENCH SECTION

(PAVED AREAS) SCALE: N.T.S.

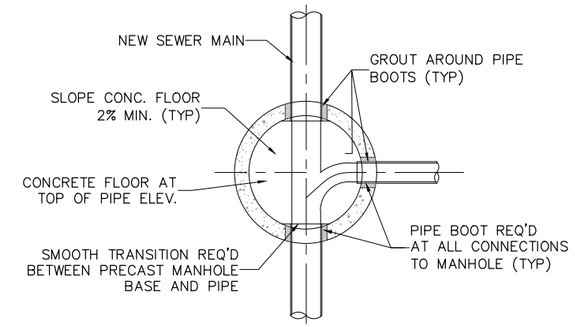

SEWER M.H. PLAN BELOW CONE

SCALE: N.T.S.

SEWER LATERAL NOTES:
1. CLEANOUTS ARE REQUIRED AT A MAX. OF 50'-0" SPACING ALONG LATERALS.
2. CLEANOUTS MUST BE LOCATED AT PROPERTY LINE.
3. TAPS ON EXISTING MAIN SHALL BE CORED AND ROMAC SEWER SADDLE W/ STAINLESS STEEL BANDS OR APPROVED EQUAL.
4. SANITARY SEWER LATERALS TO BE WHITE PVC, TO DIFFERENTIATE FROM GREEN LAND DRAIN LATERALS.
5. CONTRACTOR TO EXTEND SEWER LATERAL 10'-0" BEYOND PROPERTY LINE. MARK END WITH 2X4, PAINTED WHITE.

SEWER MANHOLE NOTES:
1. CONCRETE COLLARS FOR MANHOLES SHALL BE INSTALLED AS SHOWN ON SHEET 2, SURVEY MONUMENT SECTION.
2. MANHOLE WALL AND CONE SECTION SHALL CONFORM TO ASTM C-478.
3. MANHOLE SHALL BE 5'-0"ø IF SEWER MAIN IS GREATER THAN 12"ø, OR IF MORE THAN THREE SEWER MAIN PIPES CONNECT TO MANHOLE, OR IF OTHERWISE SPECIFIED ON DRAWINGS.
4. LIFT HOLES SHALL BE FILLED W/ GROUT.
5. MANHOLE ONE SHALL BE CONCENTRIC.
6. NO STEPS IN CONE OR MANHOLE WALL.
7. IF MANHOLES ARE TOO SHALLOW FOR CONE SECTION, USE FLAT CONCRETE LID INSTEAD.

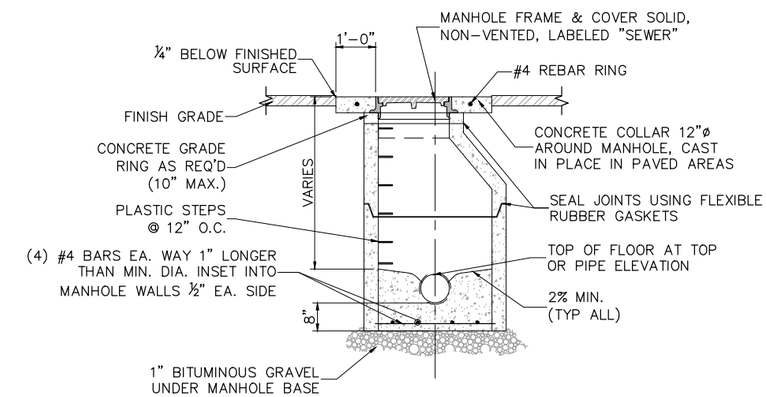

TYPICAL SEWER MANHOLE SECTION

SCALE: N.T.S.

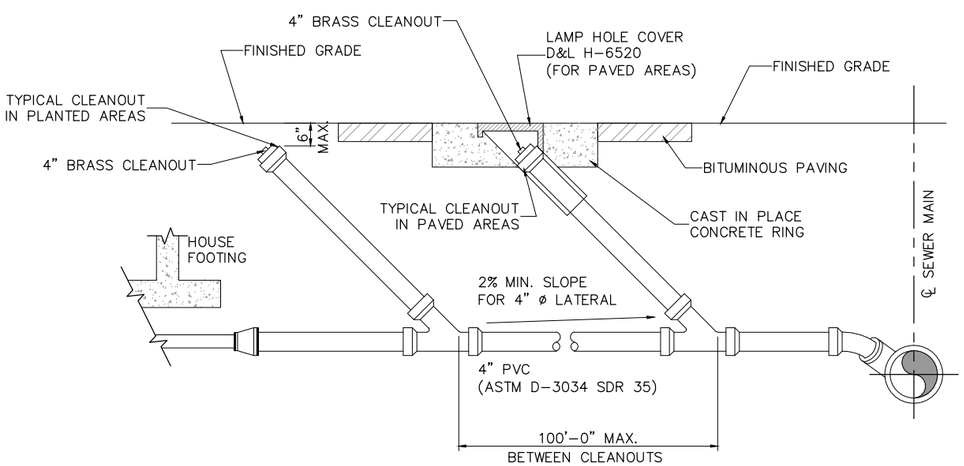

PROFILE OF TYPICAL SEWER LATERAL

SCALE: N.T.S.

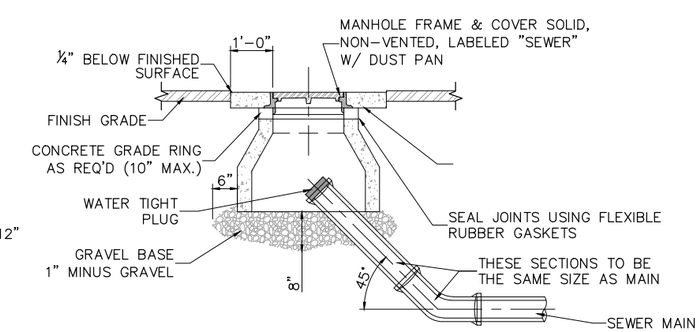

NOTE:
GRAVEL BASE TO BE 12" LARGER THAN O.D. OF MANHOLE CONE.

TEMPORARY SEWER MAIN CLEANOUT

SCALE: N.T.S.

J-U-B Engineers • Surveyors • Planners
J-U-B ENGINEERS, Inc.
466 North 900 West
Kaysville, Utah 84037
Phone: 801.547.0393
Fax: 801.547.0397
www.jub.com

REUSE OF DRAWINGS
THIS DOCUMENT, AND THE IDEAS AND DESIGNS INCORPORATED HEREIN, AS AN INSTRUMENT OF PROFESSIONAL SERVICE, IS THE PROPERTY OF J-U-B ENGINEERS, Inc. AND IS NOT TO BE USED, IN WHOLE OR PART, FOR ANY OTHER PROJECT WITHOUT THE EXPRESS WRITTEN AUTHORIZATION OF J-U-B ENGINEERS, Inc.

NO.	DESCRIPTION	BY	APR.	DATE

REVISION

DEVELOPMENT STANDARDS
CLINTON CITY CORPORATION

STANDARD SEWER MANHOLE AND MISCELLANEOUS DETAILS

FILE:12 SEWER_DET
DRAWN BY: ELC
DESIGN BY: BKW
CHECKED BY: BKW
SCALE OF SHEET
HOR SCALE: AS SHOWN
VER SCALE: NONE
LAST UPDATED: 5/11/2015
DATE PLOTTED: 5/14/2015

\\KAYS\PUBLIC\STANDARDS\CITY STANDARDS\UPDATED STANDARDS\CLINTON-JUB\12 SEWER_DET.DWG

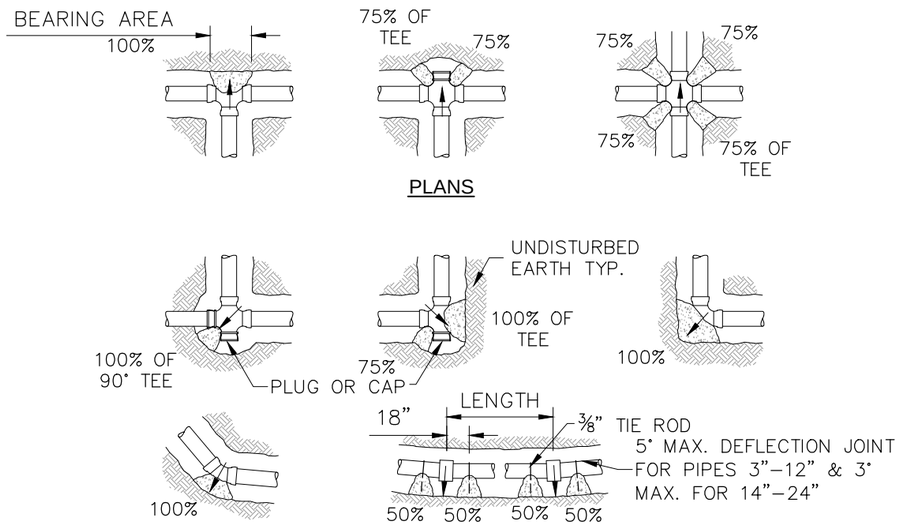

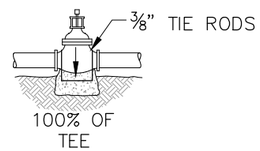

ALL MJ AND FLANGED FITTINGS TO BE WRAPPED WITH POLYETHYLENE WRAP PRIOR TO POURING THRUST BLOCK.

DETAIL NOTES:
1. FIGURE (100%) AT THRUST BLOCK INDICATES PERCENT OF TOTAL THRUST TO BE APPLIED FOR BEARING AREA.
2. ARROW (→) INDICATES THRUST DIRECTION.
3. CONCRETE FOR THRUST BLOCKS TO BE 2000 P.S.I.

EXAMPLE:
8" 90° ELBOW, PRESSURE–200 LB. / SQ. IN.
FROM TABLE: THRUST = 94 X 200 = 18800 LB.
ASSUME BEARING STRENGTH OF SOIL = 2000 LB. / SQ. FT.
$\frac{18000}{2000}$ = 9.4 SQ. FT. = AREA OF BEARING REQUIRED FOR THRUST BLOCK.

SIDE THRUST PER 1 PSI				
PIPE SIZE	DEAD END OR TEE	90° ELBOW	45° ELBOW	22 ½° ELBOW
4	19	27	15	7
6	39	55	30	15
8	67	94	51	26
10	109	154	84	43
12	155	218	119	61
14	210	296	161	82
16	272	383	209	106
18	351	494	269	137
20	434	611	333	169
24	623	878	478	244

TABLE NOTES:
1. IN USING THE ABOVE TABLES, USE THE MAXIMUM INTERNAL PRESSURE ANTICIPATED (I.E. HYDROSTATIC TEST PRESSURE, POSSIBLE SURGE PRESSURE DUE TO PUMP SHUTOFF, ETC.)
2. SEE SOILS REPORT FOR BEARING STRENGTH OF SOIL IN THE ABSENCE OF A SOILS REPORT, AND AVERAGE SOIL (SPADABLE MEDIUM CLAY) CAN BE ASSUMED TO HAVE A BEARING STRENGTH OF 2000 P.S.F.

HORIZONTAL THRUST BLOCK DETAILS

SCALE: N.T.S.

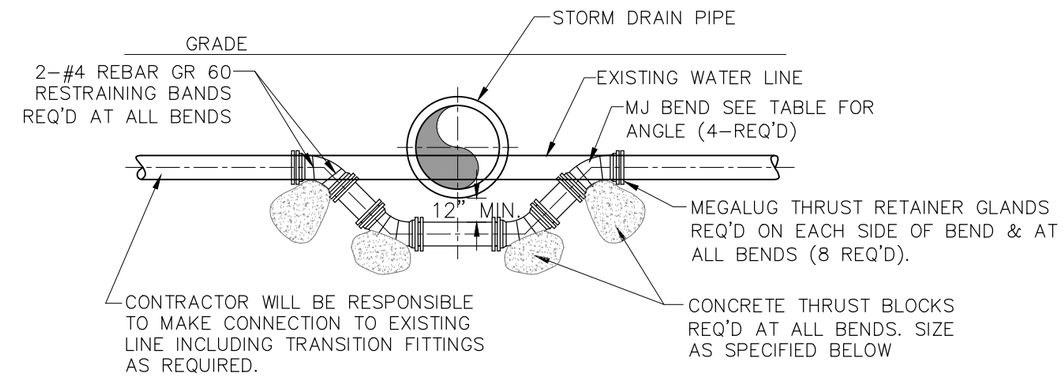

NOTES:

BEFORE RELOCATING AN EXISTING WATERLINE THE CONTRACTOR SHALL NOTIFY ALL AFFECTED BUSINESSES AND RESIDENTS 24 HOURS BEFORE CONSTRUCTION. THE CONTRACTOR MUST DEMONSTRATE TO THE CITY THE ALL OF THE MATERIALS ARE ON HAND THAT MAY BE NEEDED BEFORE RELOCATING ANY WATERLINES. RELOCATION OF WATERLINES WILL NOT BE STARTED AFTER 10:00 A.M. THE CITY SHALL OPERATE ALL MAINLINE WATER VALVES AND THE CONTRACTOR MUST CONTACT THE CITY IF SERVICE IS REQUIRED.

NOTE:

ALL MJ AND FLANGED FITTINGS TO BE WRAPPED WITH POLYETHYLENE WRAP PRIOR TO POURING THRUST BLOCK.

VERTICAL BEND

WEIGHT OF CONCRETE TO RESIST 100% OF TOTAL THRUST

VERTICAL THRUST BLOCK DIMENSION TABLE

	CONDITION		
PIPE SIZE	BEND ANGLE	BEARING AREA (SF)	GRAVITY BLOCK SIZE CY
4	45	1.0	0.5
6	45	2.0	0.75
8	22.5	2.0	0.75
10	22.5	3.0	1.0
12	22.5	4.0	1.5
12	11.25	2.0	0.75

DIMENSION TABLE CONDITIONS:

LINE PRESSURE – 120 PSI
SOIL BEARING CAPACITY – 1500 PSF
CONCRETE FOR THRUST BLOCKS TO BE 2000 P.S.I

WATERLINE LOOP DETAIL

SCALE: N.T.S.

J-U-B
Engineers • Surveyors • Planners
J-U-B ENGINEERS, Inc.
466 North 900 West
Kaysville, Utah 84037
Phone: 801.547.0393
Fax: 801.547.0397
www.jub.com

REUSE OF DRAWINGS
THIS DOCUMENT, AND THE IDEAS AND DESIGNS INCORPORATED HEREIN, AS AN INSTRUMENT OF PROFESSIONAL SERVICE, IS THE PROPERTY OF J-U-B ENGINEERS, Inc. AND IS NOT TO BE USED, IN WHOLE OR PART, FOR ANY OTHER PROJECT WITHOUT THE EXPRESS WRITTEN AUTHORIZATION OF J-U-B ENGINEERS, Inc.

NO.	DESCRIPTION	BY	APPR.	DATE

REVISION

DEVELOPMENT STANDARDS
CLINTON CITY CORPORATION

HORIZONTAL AND VERTICAL THRUST BLOCKS AND WATER LOOP DETAIL

FILE:13 THRUST_BLK,WATER_LOOP
DRAWN BY: ELC
DESIGN BY: BKW
CHECKED BY: BKW
SCALE OF SHEET
HOR SCALE: AS SHOWN
VER SCALE: NONE
LAST UPDATED: 5/11/2015
DATE PLOTTED: 5/14/2015

\\KAYSPUBLIC\STANDARDS\CITY STANDARDS\UPDATED STANDARDS\CLINTON-JUB\13 THRUST_BLK,WATER_LOOP.DWG

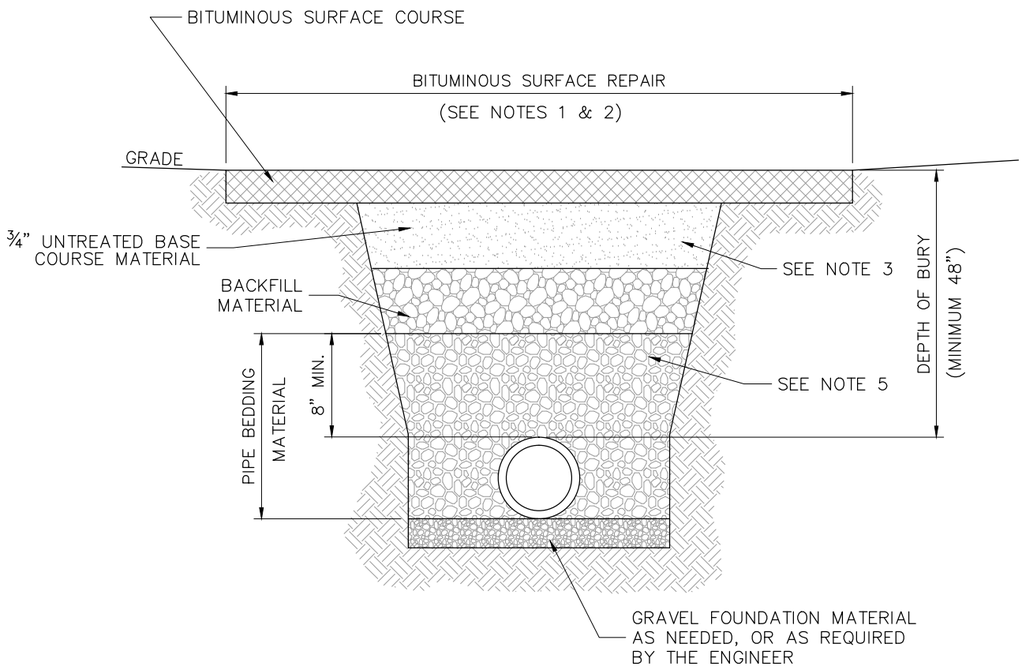

BITUMINOUS SURFACE

SCALE: N.T.S.

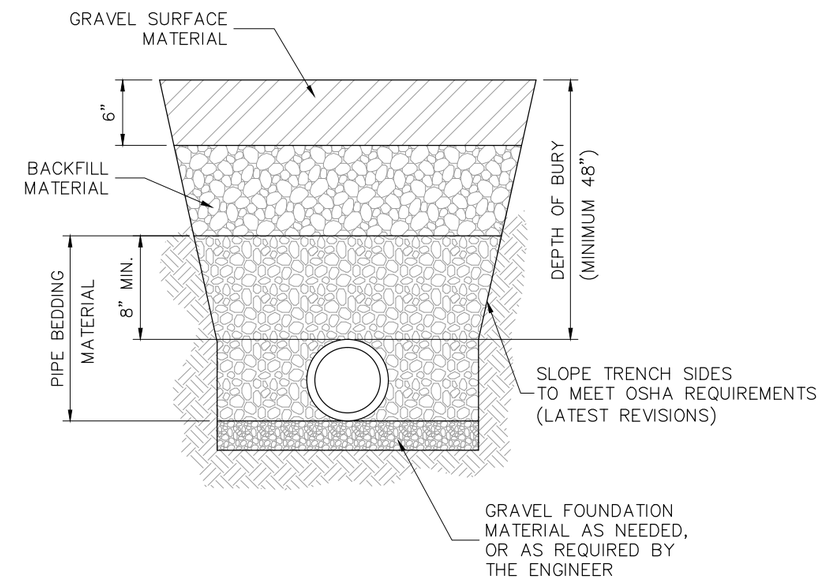

GRAVEL SURFACE

SCALE: N.T.S.

NOTES:

1. SAW CUT BITUMINOUS ASPHALT SURFACE 6" WIDER THAN TRENCH ON EACH SIDE FOR FINAL TRENCH REPAIR WHERE BITUMINOUS SURFACE EXISTS.
2. BITUMINOUS SURFACE IS TO BE 5" OR TO MATCH EXISTING THICKNESS, WHICHEVER IS GREATER FOR STATE ROADS & 3" OR MATCH EXISTING THICKNESS, WHICHEVER IS GREATER FOR OTHER ROADS.
3. FOR TRENCH REPAIR, ¾" UNTREATED BASE COURSE MATERIAL IS TO BE 12" OR TO MATCH EXISTING THICKNESS, WHICHEVER IS GREATER. FOR NEW ROAD CONSTRUCTION, ¾" UNTREATED BASE COURSE MATERIAL IS TO BE 10" MIN. OR AS DIRECTED BY THE ENGINEER. BASE COURSE TO BE COMPACTED TO 96% ASTM D-1557.
4. SLOPE TRENCH SIDES TO MEET OSHA SAFETY REGULATIONS. (LATEST REV.)
5. BACKFILL TO BE COMPACTED TO 96% ASTM D-1557 IN ROADWAYS AND 90% IN LANDSCAPED AREAS.

CULINARY WATER TRENCH SECTIONS

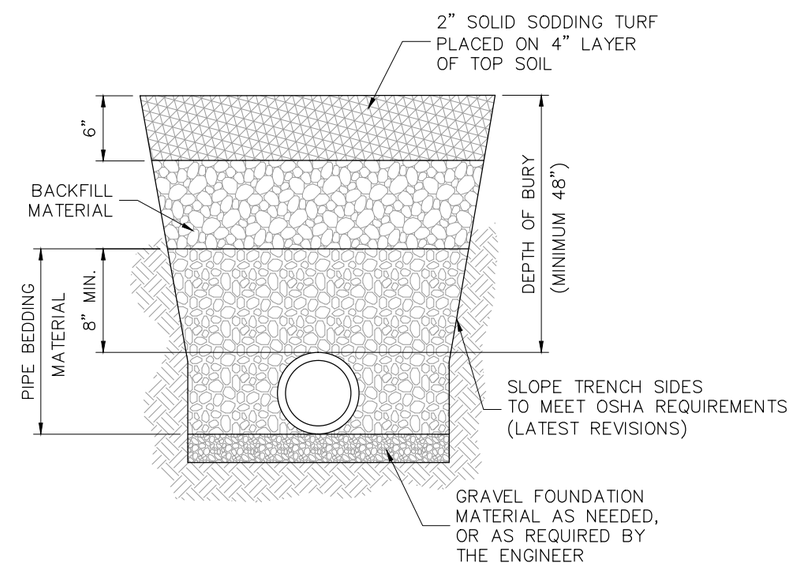

TURF SURFACE

SCALE: N.T.S.

J-U-B Engineers • Surveyors • Planners

J-U-B ENGINEERS, Inc.
466 North 900 West
Kaysville, Utah 84037

Phone: 801.547.0393
Fax: 801.547.0397
www.jub.com

REUSE OF DRAWINGS

THIS DOCUMENT, AND THE IDEAS AND DESIGNS INCORPORATED HEREIN, AS AN INSTRUMENT OF PROFESSIONAL SERVICE, IS THE PROPERTY OF **J-U-B ENGINEERS, Inc.** AND IS NOT TO BE USED, IN WHOLE OR PART, FOR ANY OTHER PROJECT WITHOUT THE EXPRESS WRITTEN AUTHORIZATION OF **J-U-B ENGINEERS, Inc.**

NO.	DESCRIPTION	BY	APPR.	DATE

REVISION

DEVELOPMENT STANDARDS
CLINTON CITY CORPORATION

CULINARY WATER TRENCH DETAILS

FILE:14 TRENCH
DRAWN BY: ELC
DESIGN BY: BKW
CHECKED BY: BKW
SCALE OF SHEET
HOR SCALE: AS SHOWN
VER SCALE: NONE
LAST UPDATED: 5/11/2015
DATE PLOTTED: 5/14/2015

\\KAYS\PUBLIC\STANDARDS\CITY STANDARDS\UPDATED STANDARDS\CLINTON-JUB\14 TRENCH.DWG

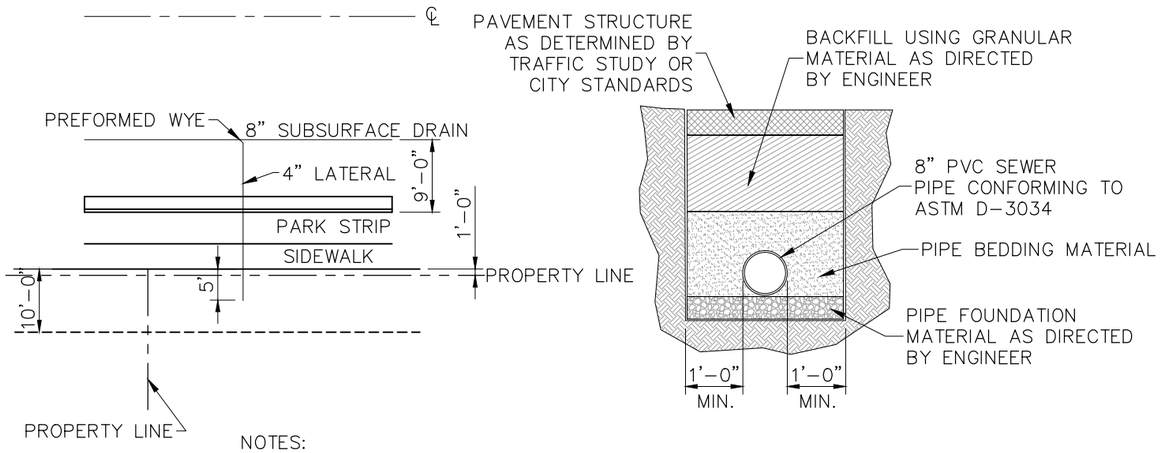

NOTES:
1. CONTRACTOR SHALL USE SINGLE OR DOUBLE PULL BOX TO PROTECT WORKERS AND STABILIZE TRENCH SIDES.
2. ALL CONNECTIONS SHALL BE MADE USING PREFORMED FITTINGS CONFORMING TO ASTM D-3034.
3. CONTRACTOR SHALL PROVIDE A CLEANOUT WITHIN 5'-0" OF HOUSE.
4. LAND DRAIN LATERALS TO BE GREEN PVC TO DIFFERENTIATE FROM SANITARY SEWER LATERALS. MARK END WITH 2X4, PAINTED GREEN.

TIGHT JOINT SUBSURFACE DRAIN DETAIL

SCALE: N.T.S.

BACKFILL USING GRANULAR FILTER MATERIAL TO MAXIMUM GROUNDWATER ELEVATION AS DIRECTED BY THE ENGINEER.

NOTES:
1. CONTRACTOR SHALL USE SINGLE OR DOUBLE PULL BOX TO PROTECT WORKERS AND STABILIZE TRENCH SIDES.
2. DEWATERING SHALL NOT ALLOW PIPING OF FINES.

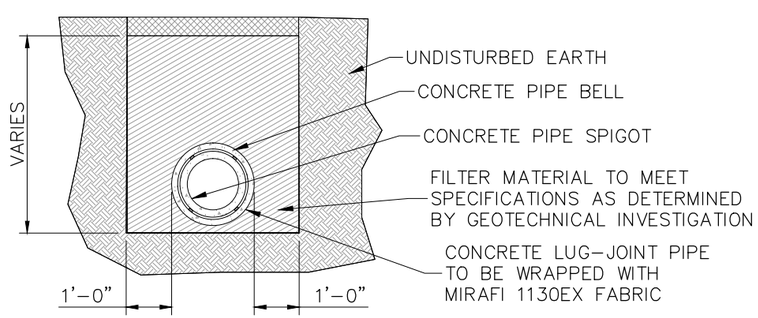

OPEN JOINT SUBSURFACE DRAIN DETAIL

SCALE: N.T.S. ONLY WHEN APPROVED BY CLINTON CITY

\\KAYS\PUBLIC\STANDARDS\CITY STANDARDS\UPDATED STANDARDS\CLINTON-JUB\15 LAND_DRAIN.DWG

J-U-B Engineers • Surveyors • Planners

J-U-B ENGINEERS, Inc.
466 North 900 West
Kaysville, Utah 84037

Phone: 801.547.0393
Fax: 801.547.0397
www.jub.com

REUSE OF DRAWINGS
THIS DOCUMENT, AND THE IDEAS AND DESIGNS INCORPORATED HEREIN, AS AN INSTRUMENT OF PROFESSIONAL SERVICE, IS THE PROPERTY OF J-U-B ENGINEERS, Inc. AND IS NOT TO BE USED, IN WHOLE OR PART, FOR ANY OTHER PROJECT WITHOUT THE EXPRESS WRITTEN AUTHORIZATION OF J-U-B ENGINEERS, Inc.

NO.	DESCRIPTION	BY	APR.	DATE

REVISION

DEVELOPMENT STANDARDS
CLINTON CITY CORPORATION

LAND DRAIN DETAILS

FILE:15 LAND_DRAIN
DRAWN BY: ELC
DESIGN BY: BKW
CHECKED BY: BKW
SCALE OF SHEET
HOR SCALE: AS SHOWN
VER SCALE: NONE
LAST UPDATED: 5/11/2015
DATE PLOTTED: 5/14/2015

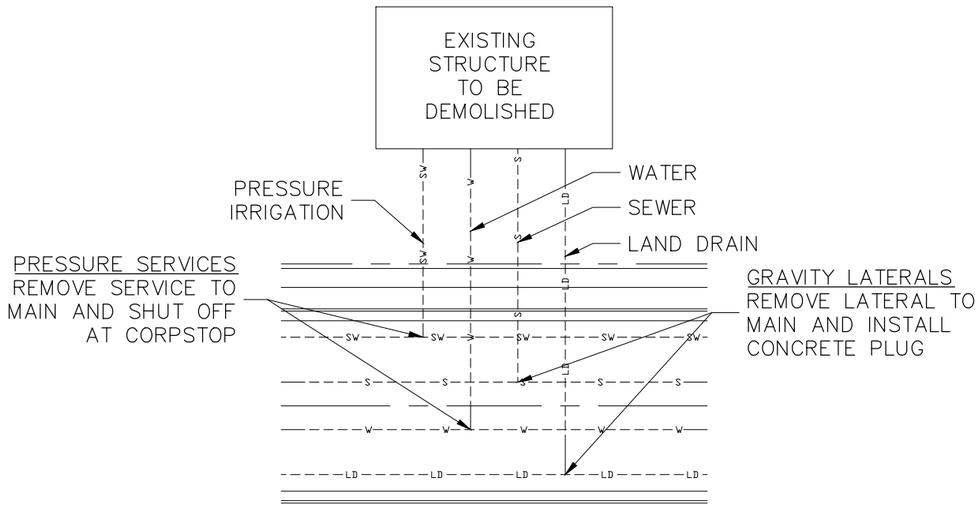

NOTE:
IF UTILITY SERVICE LATERALS ARE TO BE REUSED, THE CONDITION MUST BE DETERMINED BY THE CONTRACTOR/OWNER. IF THE CONDITION OF THE LATERALS DOES NOT MEET CURRENT STANDARDS, THE LATERALS MUST BE REPLACED TO THE MAIN LINE.

UTILITIES FOR HOME DEMOLITION

SCALE: N.T.S.

J-U-B
Engineers • Surveyors • Planners
J-U-B ENGINEERS, Inc.
466 North 900 West
Kaysville, Utah 84037
Phone: 801.547.0393
Fax: 801.547.0397
www.jub.com

REUSE OF DRAWINGS
THIS DOCUMENT, AND THE IDEAS AND DESIGNS INCORPORATED HEREIN, AS AN INSTRUMENT OF PROFESSIONAL SERVICE, IS THE PROPERTY OF **J-U-B ENGINEERS, Inc.** AND IS NOT TO BE USED, IN WHOLE OR PART, FOR ANY OTHER PROJECT WITHOUT THE EXPRESS WRITTEN AUTHORIZATION OF **J-U-B ENGINEERS, Inc.**

NO.	DESCRIPTION	BY	APR.	DATE

REVISION

DEVELOPMENT STANDARDS
CLINTON CITY CORPORATION

DEMOLITION DETAILS

FILE:16 DEMOLITION
DRAWN BY: ELC
DESIGN BY: BKW
CHECKED BY: BKW
SCALE OF SHEET
HOR SCALE: AS SHOWN
VER SCALE: NONE
LAST UPDATED: 5/11/2015
DATE PLOTTED: 5/14/2015

\\KAYSPUBLIC\STANDARDS\CITY STANDARDS\UPDATED STANDARDS\CLINTON-JUB\16 DEMOLITION.DWG

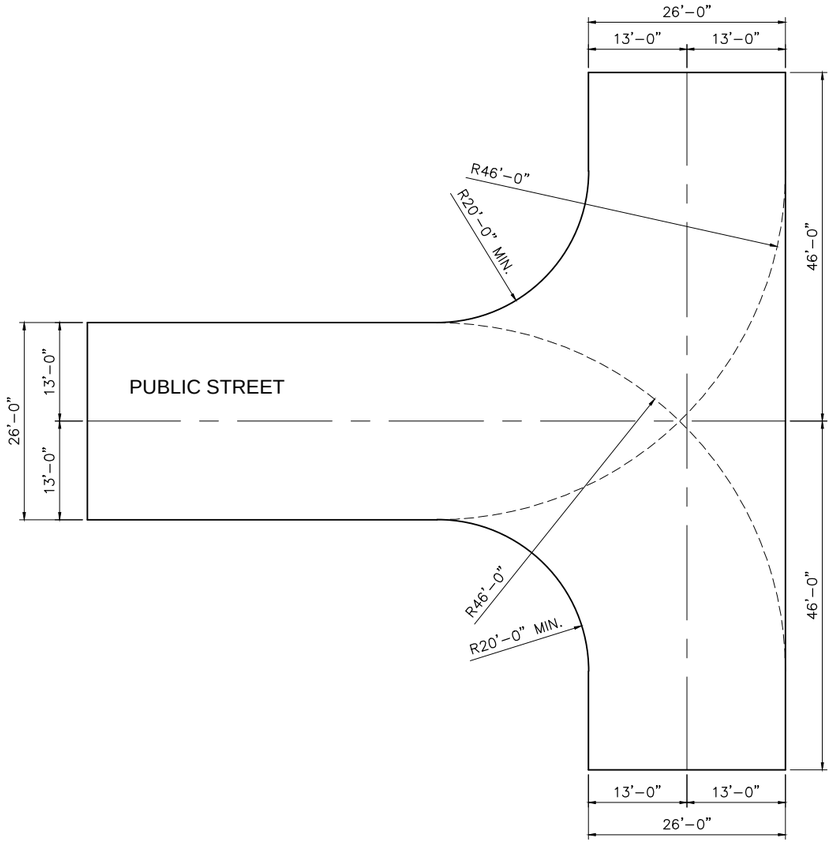

EMERGENCY VEHICLE TURNING RADII DETAIL

SCALE: NOT TO SCALE

J-U-B Engineers • Surveyors • Planners

J-U-B ENGINEERS, Inc.
466 North 900 West
Kaysville, Utah 84037

Phone: 801.547.0393
Fax: 801.547.0397
www.jub.com

REUSE OF DRAWINGS

THIS DOCUMENT, AND THE IDEAS AND DESIGNS INCORPORATED HEREIN, AS AN INSTRUMENT OF PROFESSIONAL SERVICE, IS THE PROPERTY OF **J-U-B ENGINEERS, Inc.** AND IS NOT TO BE USED, IN WHOLE OR PART, FOR ANY OTHER PROJECT WITHOUT THE EXPRESS WRITTEN AUTHORIZATION OF **J-U-B ENGINEERS, Inc.**

NO.	DESCRIPTION	BY	APR.	DATE

REVISION

DEVELOPMENT STANDARDS
CLINTON CITY CORPORATION

EMERGENCY VEHICLE ACCESS DETAILS

FILE:17 EMERGENCY ACCESS
DRAWN BY: ELC
DESIGN BY: BKW
CHECKED BY: BKW
SCALE OF SHEET
HOR SCALE: AS SHOWN
VER SCALE: NONE
LAST UPDATED: 5/11/2015
DATE PLOTTED: 5/14/2015

\\KAYS\PUBLIC\STANDARDS\CITY STANDARDS\UPDATED STANDARDS\CLINTON-JUB\17 EMERGENCY ACCESS.DWG